Level measuring device with guided radar - sanitary variant

- Universal level measuring device for liquids
- Liquid interface measurement
- Insensitive to dust and steam
- 4... 20 mA/Hart, 2 wires
- ATEX/IECEx certifications

Product variants described in the data sheet may differ from the product presentation and description.

Can be combined with

Type 8619
multiCELL – multi-channel/ multi-function transmitter/ controller

Type 8611
eCONTROL – Universal controller

Type 8802
ELEMENT continuous control valve systems – overview

Type 8644
AirLINE SP electropneumatic automation system

Type 8793
Digital electropneumatic Process Controller SideCONTROL

Type description

The Type 8189 is a level measuring device with interchangeable rod probe, designed for continuous level measurement.

The unit is suitable for liquids, for industrial use in all areas of process technology. But the main application targets are in Food and Beverage (F&B) and pharmaceutical tanks to the new rod in stainless steel 1.4435 with Ra < 0.76 µm. For applications with corrosive liquids a PFA coated variant is available.

Even process conditions such as strong steam generation, density fluctuations or changes of the dielectric constant do not influence the accuracy of the measurement. Build-up or condensation on the probe or vessel wall does not influence the measurement result.

DTS 1000244852 EN Version: J Status: RL (released | freigegeben | valide) printed: 20.05.2026

© Christian Bürkert GmbH & Co. KG, Subject to alteration

Table of contents

1. General technical data 3

2. Approvals and conformities 5

2.1. General notes 5
2.2. Conformity 5
2.3. Standards 5
2.4. Explosion protection 5
2.5. Foods and beverages/Hygiene 5

3. Materials 6

3.1. Bürkert resistApp 6

4. Dimensions 6

4.1. Variant with clamp connection 6
4.2. Variant with connection according to DIN 11851 7

5. Performance specifications 8

5.1. Measuring range and blocking distance diagram 8
5.2. Measurement deviation diagram 8
Variant with rod probe in water 8
Variant with rod probe in oil 9
5.3. Temperature derating diagram 9

6. Product operation 9

6.1. Measurement principle 9
6.2. Product operation notes 9
Set up with display/configuration module 10
Set up with PACTware™/DTM and HART communication 10

7. Ordering information 10

7.1. Bürkert eShop 10
7.2. Bürkert product filter 11
7.3. Ordering chart 11
7.4. Ordering chart accessories 11

DTS 1000244852 EN Version: J Status: RL (released | freigegeben | valide) printed: 20.05.2026

1. General technical data

Product properties	
Material	
Make sure the device materials are compatible with the fluid you are using. Further information can be found in chapter "3.1. Bürkert resistApp" on page 6.	
Non-wetted parts	
Cover	PC transparent
Housing	Plastic PBT (Polyester) and stainless steel 316L (1.4404)
Grounding terminal and screw	Stainless steel 316L
Seal	Between housing and cover: EPDM
Cable gland	PA
Blind plug	PA
Wetted parts	
Process connection	Stainless steel 316L (1.4404 or 1.4435) and PEEK
Probe	Rod-Ø 8 mm in stainless steel 316L (1.4435), polished
Seal	Process seal in EPDM
Surface quality	Rod: Ra ≤ 0.76 µm (with low delta ferrite content)
Dimensions	Further information can be found in chapter "4. Dimensions" on page 6.
Weight	• Housing: 890 g • Rod-Ø 8 mm: approx. 400 g/m
Probe length	0.3...4 m (lateral load: 10 Nm)
Measured quantity	Level of liquids
Measuring range	0.08...4 m Further information can be found in chapter "5.1. Measuring range and blocking distance diagram" on page 8.
Damping (63 % of the input variable)	0...999 s, adjustable
Product accessories	
Display/configuration module	LCD in full dot matrix. Further information can be found in chapter "7.4. Ordering chart accessories" on page 11.
Performance data	
Blocking distance	• In water: – from top of probe: 80 mm – from bottom of probe: 0 mm • In oil – from top of probe: 150 mm – from bottom of probe: 100 mm
Measuring range resolution	< 1 mm
Measurement deviation [1.) 2.)]	According to DIN EN 60770-1: ± 2 mm Further information can be found in chapter "5.2. Measurement deviation diagram" on page 8.
Non-repeatability	≤ ± 1 mm
Measuring cycle time	< 500 ms
Step response time [3.)]	≤ 3 s
Max. filling/emptying speed	1 m/min (products with high dielectric constant (> 10) up to 5 m/min.)
Temperature drift	• Digital output: ± 3 mm/10 K, max. 10 mm • Current output: < 0.03 %/10K related to the 16 mA span or ≤ 0.3 %
Electrical data	
Operating voltage (U_n)	• Without display/configuration module: – 9.6...35 V DC – 9.6...30 V DC (Ex ia instrument) • With display/configuration module: – 16...35 V DC – 16...30 V DC (Ex ia instrument)
Power source (not supplied)	Limited power source according to UL/EN 62368-1 standards or limited energy circuit according to UL/EN 61010-1 paragraph 9.4
DC reverse polarity protection	Yes

DTS 1000244852 EN Version: J Status: RL (released | freigegeben | valide) printed: 20.05.2026

Residual ripple (for DC)	• For 9.6 V < U_n < 18 V: ≤ 0.7 V_{eff} (16...400 Hz) • For 18 V < U_n < 35 V: ≤ 1.0 V_{eff} (16...400 Hz)
Overvoltage category according to IEC 61010-1	Category III
Protection class according to IEC 61010-1	Class III
Starting current	≤ 3.6 mA, ≤ 10 mA for 5 ms after the switching on
Load resistor	(U_n - $U_{min.}$)/0.022 A
Output	4...20 mA/HART
Output signal range	3.8...20.5 mA/HART (default setting)
Signal resolution	0.3 µA
Output current	Max 21.5 mA
Fault signal	Current output: last valid measured value, ≥ 21 mA or < 3.6 mA (adjustable)
Voltage supply cable	• Cable diameter: 5...9 mm • Wire cross-section (spring-loaded terminals): – Massive wire, stranded wire: 0.2...2.5 mm² (AWG 24...14) – Stranded wire with end sleeve: 0.2...1.5 mm² (AWG 24...16)
Medium data	
Process temperature	- 20...+ 130 °C (- 4...+ 266 °F) (for sterilisation process: up to + 150 °C (+ 302 °F) for max. 120 min)
Process pressure	Vessel pressure: - 1...16 bar (- 14.51...232.16 PSI/- 100...1600 kPa)
Dielectric constant	εr > 1.6
Product connections	
Process connection	• Clamp 2" • DIN 11851 DN 50
Electrical connection	Cable gland M20 × 1.5
Approvals and conformities	
Directives	
CE directive	Further information on the CE Directive can be found in chapter "2.3. Standards" on page 5.
NAMUR recommendation	• NE21 – Electromagnetic compatibility of equipment • NE43 – Signal level for fault information from measuring transducers • NE53 - Compatibility of field devices and display/adjustment components • NE107 - Self-monitoring and diagnosis of field devices
Explosion protection	ATEX/IECEx: EN IEC 60079-0, EN 60079-11, EN 60079-26 Further information can be found in chapter "2.4. Explosion protection" on page 5.
Foods and beverages/Hygiene	FDA declaration of conformity. Further information can be found in chapter "2.5. Foods and beverages/Hygiene" on page 5.
Environment and installation	
Ambient temperature	Operation and storage: - 40...+ 80 °C (- 40...+ 176 °F) (with display/configuration module)
Temperature derating	Further information can be found in chapter "5.3. Temperature derating diagram" on page 9.
Relative air humidity	• Operation: max. 75 %, without condensation • Storage: 20...85 %, without condensation
Height above sea level	Max. 2000 m (by default; max. 5000 m with connected overvoltage protection)
Degree of protection according to IEC/EN 60529	IP66/IP67 with cable plug mounted and tightened M20 × 1.5
Pollution degree	Degree 4 (when used with fulfilled housing protection)

1.) Depending on the mounting conditions, deviations can occur which can be rectified by adapting the adjustment or changing the measured value offset in the DTM service mode.
2.) The blocking distances can be optimized by a false signal suppression.
3.) Time span a sudden measurement distance change by max. 0.5 m in liquid applications, until the output signal signal has taken for the first time 90 % of the final value (IEC 61298-2).

DTS 1000244852 EN Version: J Status: RL (released | freigegeben | valide) printed: 20.05.2026

2. Approvals and conformities

2.1. General notes

- The approvals and conformities listed below must be stated when making enquiries. This is the only way to ensure that the product complies with all required specifications.
- Not all available variants of the device can be supplied with the below mentioned approvals or conformities.

2.2. Conformity

In accordance with the Declaration of Conformity, the product is compliant with the EU Directives.

2.3. Standards

The applied standards which are used to demonstrate compliance with the EU Directives are listed in the EU-Type Examination Certificate and/or the EU Declaration of Conformity.

2.4. Explosion protection

Note:
Devices with Ex certification have different technical data, see **Supplement ATEX/IECEx Type 8189** ▸ under "User manuals".

Approval	Description
	Optional: Explosion protection Ex marking of the components according to: **ATEX:** TÜV 19 ATEX 260229X • II 1G Ex ia IIC T6...T1 Ga resp. • II 1/2G Ex ia IIC T6...T1 Ga/Gb resp. • II 2G Ex ia IIC T6...T1 Gb **IECEx:** IECEx TUN 19.0021X • Ex ia IIC T6...T1 Ga resp. • Ex ia IIC T6...T1 Ga/Gb resp. • Ex ia IIC T6...T1 Gb Measures for compliance with ATEX/IECEx requirements: see **Additional manual/Supplement ATEX/IECEx Type 8189** ▸ under "User manuals". The Ex. certification is only valid if the Bürkert device is used as described in the additional manual/supplement. Any unauthorized modifications made to the device will invalidate the Ex certification.

2.5. Foods and beverages/Hygiene

Conformity	Description
FDA	**FDA – Code of Federal Regulations** The devices are compliant in their composition with the Code of Federal Regulations published by the FDA (Food and Drug Administration, USA) according to the manufacturer's declaration.

DTS 1000244852 EN Version: J Status: RL (released | freigegeben | valide) printed: 20.05.2026

3. Materials

3.1. Bürkert resistApp

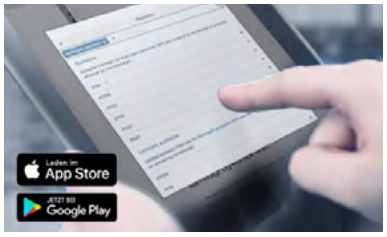

Bürkert resistApp – Chemical resistance chart

You want to ensure the reliability and durability of the materials in your individual application case? Verify your combination of media and materials on our website or in our resistApp.

Start chemical resistance check

4. Dimensions

4.1. Variant with clamp connection

Note:
Dimensions in mm, unless otherwise stated

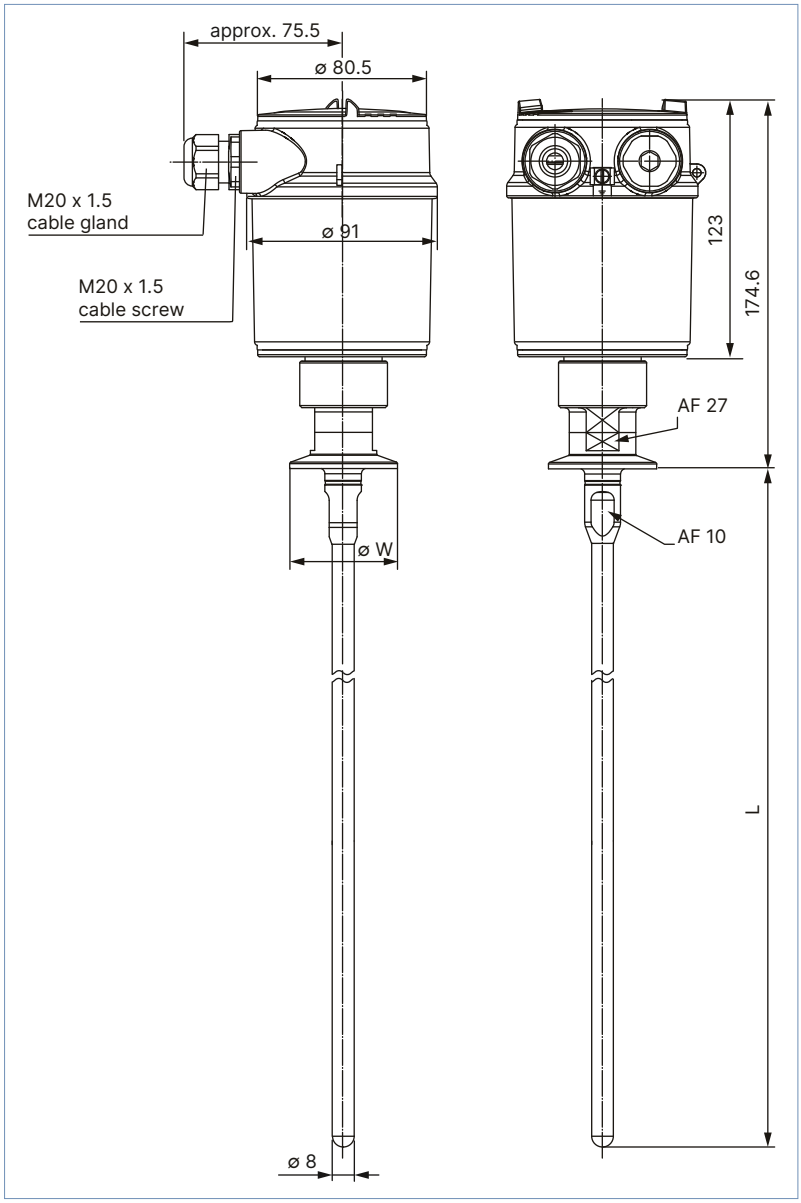

Clamp connection	Ø W	L
1", 1½"	50.5	0.3...4 m
2"	64.0	
2½"	77.5	
3"	91.0	

DTS 1000244852 EN Version: J Status: RL (released | freigegeben | valide) printed: 20.05.2026

4.2. Variant with connection according to DIN 11851

Note:
Dimensions in mm, unless otherwise stated

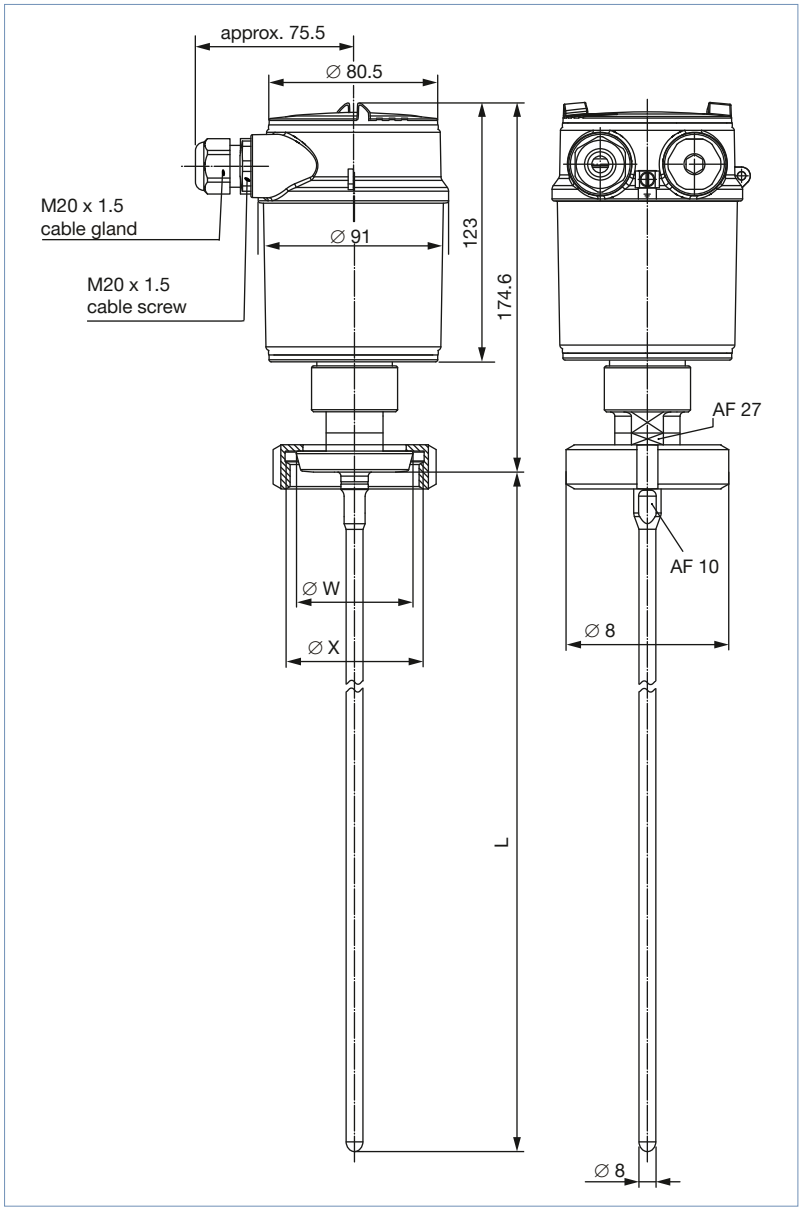

DIN 11851 connection	Ø W	Ø X	L
DN 32	50.0	Rd 58 × 1/6	0.3...4 m
DN 40	56.0	Rd 65 × 1/6	
DN 50	68.5	Rd 78 × 1/6 6	
DN 65	86.0	Rd 58 × 1/6	

DTS 1000244852 EN Version: J Status: RL (released | freigegeben | valide) printed: 20.05.2026

5. Performance specifications

5.1. Measuring range and blocking distance diagram

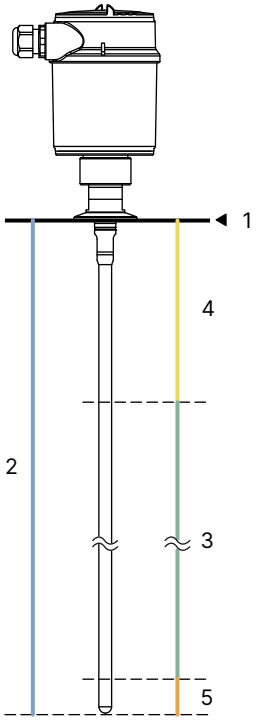

No.	Description	
1	Reference plane	–
2	Measuring probe length	0.3...4 m
3	Measuring range	In water: 0.08...4 m In oil: 0.15...3.95 m
4	Upper block distance	In water: 0.08 m In oil: 0.15 m
5	Lower block distance	In water: 0 m In oil: 0.1 m

5.2. Measurement deviation diagram

Variant with rod probe in water

Note:
The blocking distance is indicated by the grey area in the diagram. No measurement is possible in this area.

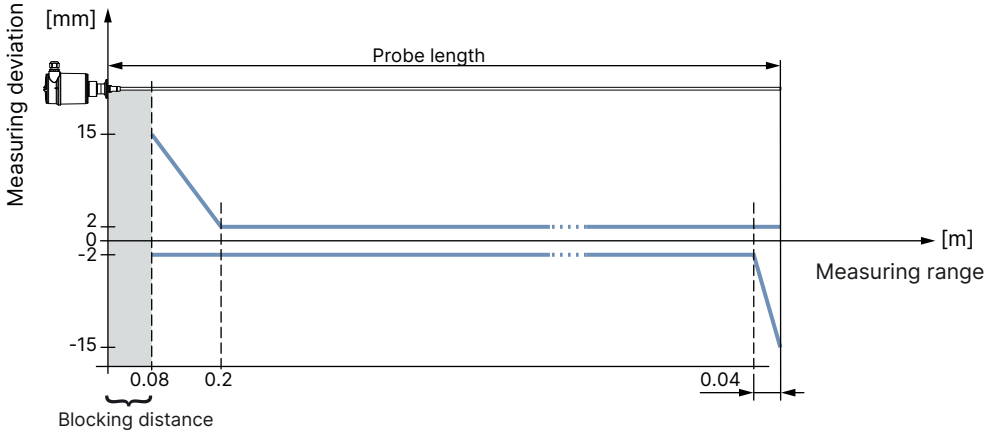

DTS 1000244852 EN Version: J Status: RL (released | freigegeben | valide) printed: 20.05.2026

Variant with rod probe in oil

Note:
The blocking distance is indicated by the grey area in the diagram. No measurement is possible in this area.

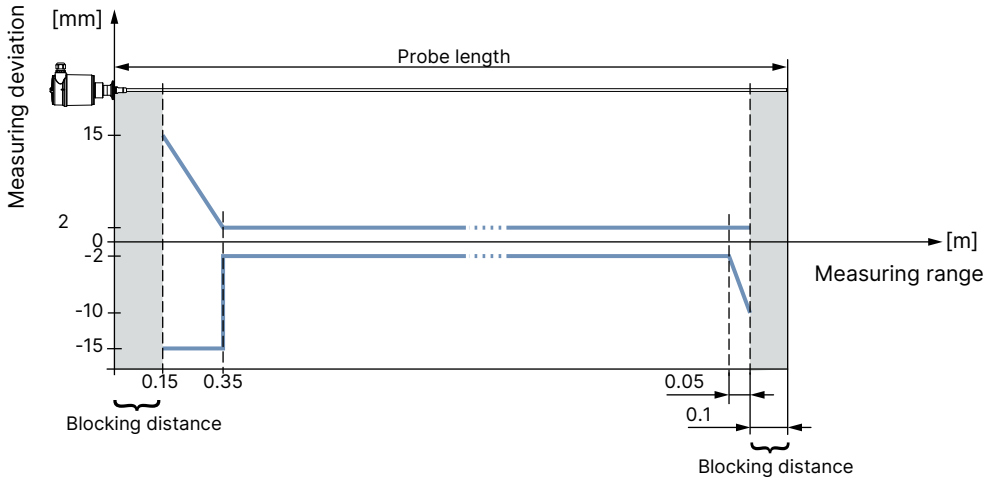

5.3. Temperature derating diagram

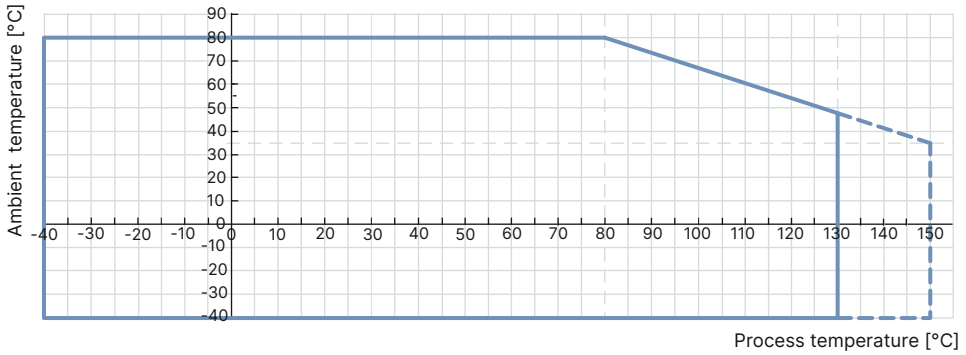

6. Product operation

6.1. Measurement principle

High frequency microwave pulses are guided along a rod. When they reach the product surface, the microwave pulses are reflected and received by the processing electronics. The running time is evaluated by the instrument and outputted as distance. Time consuming adjustment with medium is not necessary. The instruments are pre-set to the ordered probe length.
The shortenable rod variants can be adapted individually to the local requirements.

6.2. Product operation notes

The measuring device can be adjusted with:

- The display/configuration module
- The suitable Bürkert DTM in conjunction with a software according to the FDT/DTM standard, e.g. PACTware™ and PC
- With a HART handheld

The entered parameters are generally saved in the measuring device Type 8189. Optionally, parameters may also be uploaded and downloaded with the display/configuration module or saved in a file by using PACTware™/Type 8189-DTM.

DTS 1000244852 EN Version: J Status: RL (released | freigegeben | valide) printed: 20.05.2026

Set up with display/configuration module

Display/configuration module	Description
	The display/configuration module can be inserted into the measuring device and removed again at any time. It is not necessary to interrupt the power supply. The measuring device is adjusted via the four keys of the display/configuration module.

Set up with PACTware™/DTM and HART communication

Assembly	Description
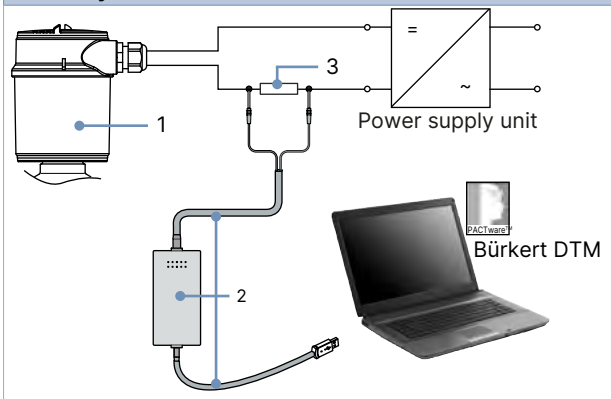	The measuring device can be operated thanks to PACTware™, via HART communication. An interface adapter is necessary for the adjustment with PACTware™. For the setup of the Type 8189, the DTM in the actual version must be used. The basic version of DTM incl. PACTware™ is available as a free-of-charge download from the internet at **www.burkert.com** ▶. **Connecting the PC via HART** **No.** / **Description** **1** Measuring device Type 8189 **2** HART-USB Modem **3** Resistance 250 Ω Necessary components: • Measuring device Type 8189 • PC with PACTware™ and suitable Bürkert DTM • HART-USB Modem • Resistance approx. 250 Ω • Power supply unit

7. Ordering information

7.1. Bürkert eShop

Bürkert eShop – Easy ordering and quick delivery

You want to find your desired Bürkert product or spare part quickly and order directly? Our online shop is available for you 24/7. Sign up and enjoy all the benefits.

Order online now

DTS 1000244852 EN Version: J Status: RL (released | freigegeben | valide) printed: 20.05.2026

7.2. Bürkert product filter

Bürkert product filter – Get quickly to the right product

You want to select products comfortably based on your technical requirements?
Use the Bürkert product filter and find suitable articles for your application quickly and easily.

Try out our product filter

7.3. Ordering chart

Note:
The following variants are supplied with display/configuration module.

Description	Operating voltage	Sensor variant	Probe length	Output	Electrical connection	Article no.
Standard variant						
Clamp 2"	9.6...35 V DC	Rod	1 m	4...20 mA/HART (2 wires)	Cable gland M20 × 1.5	565850
			2 m			565852
DIN 11851, DN 50			1 m			565851
			2 m			565853
Ex variant - ATEX certification						
Clamp 2"	9.6...30 V DC	Rod	1 m	4...20 mA/HART (2 wires)	Cable gland M20 × 1.5	565854
			2 m			565856
DIN 11851, DN 50			1 m			565855
			2 m			565857
Ex variant - IECex certification						
Clamp 2"	9.6...30 V DC	Rod	1 m	4...20 mA/HART (2 wires)	Cable gland M20 × 1.5	565858
			2 m			565860
DIN 11851, DN 50			1 m			565859
			2 m			565861

Further variants on request

Material FFKM	**Temperature** - 20...+ 150 °C
Process connection • Clamp 1½", 2½", 3" • DIN 11851 DN 32, DN 40, DN 65	**Additional** Without display/configuration module

7.4. Ordering chart accessories

Description	Article no.
Set with two adapters M20 × 1.5 /NPT ½", two neoprene flat seals for cable gland or plug and two screw plugs M20 × 1.5	551782
Hart-USB Modem	560177
Set with a display/configuration module, a transparent cover and a sealing ring	559279
Set with a transparent cover and a sealing ring	561006

DTS 1000244852 EN Version: J Status: RL (released | freigegeben | valide) printed: 20.05.2026