Vibrating filling level switch

- For universal applications such as filling level detection or dry run protection system
- Installation without adjustment
- Ideal for the food, beverage and pharmaceutical industry with a surface roughness < 0.8 µm
- ATEX approvals

Product variants described in the data sheet may differ from the product presentation and description.

Can be combined with

Type 2030
2/2-way diaphragm valve with pneumatic plastic actuator (Type CLASSIC)

Type 8644
AirLINE SP electropneumatic automation system

Type 2301
Pneumatically operated 2-way Globe Control Valve

Type 8619
multiCELL – multi-channel/ multi-function transmitter/ controller

Type description

The Type 8111 is a filling level switch for liquids, using a tuning fork as the sensor element.

It is designed for industrial use in all areas of process technology and can be used in liquids. Typical applications are overfill or dry run protection.

Depending on the variant, the devices are also used for monitoring or controlling filling levels in potentially explosive atmospheres, also for combustible liquids, gases, fumes or vapours.

Due to the simple and rugged measuring system, the Type 8111 is virtually unaffected by the chemical and physical features of the liquid. It also works under unfavourable conditions such as turbulence, air bubbles, foam generation (not suitable for measuring the foam thickness itself), adhesions, strong external vibrations or varying filling materials.

DTS 1000086887 EN Version: T Status: RL (released | freigegeben | valide) printed: 20.05.2026

© Christian Bürkert GmbH & Co. KG, Subject to alteration

Visit product website

Table of contents

1. General technical data 3

1.1. About the device 3
1.2. All variants 3
1.3. Vibrating level switch with relay output 4
1.4. Vibrating level switch with NAMUR output 4

2. Approvals and conformities 5

2.1. General notes 5
2.2. Conformity 5
2.3. Standards 5
2.4. Explosion protection 5

3. Materials 5

3.1. Bürkert resistApp 5
3.2. Material specifications 6

4. Dimensions 6

4.1. G ¾" or NPT ¾" connection 6
4.2. G 1" or NPT 1" connection 7
4.3. Clamp 2" connection 7

5. Performance specifications 8

5.1. Temperature derating diagram 8

6. Product installation 8

6.1. Installation notes 8

7. Product operation 9

7.1. Measuring principle 9

8. Product accessories 9

9. Ordering information 9

9.1. Bürkert eShop 9
9.2. Bürkert product filter 10
9.3. Ordering chart 10
9.4. Ordering chart accessories 10

DTS 1000086887 EN Version: T Status: RL (released | freigegeben | valide) printed: 20.05.2026

1. General technical data

1.1. About the device

The vibrating level switch is available with double relay output or with NAMUR output. The technical data depends on the vibrating level switch variant.

1.2. All variants

Product properties	
Material	
Make sure the device materials are compatible with the fluid you are using. Further information can be found in chapter "3.1. Bürkert resistApp" on page 5.	
Further information on the materials can be found in chapter "3.2. Material specifications" on page 6.	
Surface quality	Ra < 3.2 µm (thread) / Ra < 0.8 µm (clamp)
Dimensions	Further information can be found in chapter "4. Dimensions" on page 6.
Weight	Approx. 850 g
Measured variable	Limit level of liquids
Performance data	
Measurement deviation	± 1 mm
Repeatability	0.1 mm
Hysteresis	Approx. 2 mm with vertical installation
Switching delay	Approx. 500 ms (On/Off)
Electrical data	
Power source (not supplied)	Limited power source according to UL/EN 62368-1 standards or limited energy circuit according to UL/EN 61010-1 paragraph 9.4
Overvoltage category according to IEC 61010-1	Category III
Resonance frequency	Approx. 1200 Hz
Medium data	
Process temperature	- 50...+ 150 °C (- 58...+ 302 °F)
Process pressure	- 1...64 bar/- 100...6400 kPa (- 14.51...+ 928.64 PSI)
Dynamic viscosity η	0.1...10000 mPa.s (requirement: with density 1)
Density	Selected by DIP switch: • Standard sensitivity: 0.7...2.5 g/cm³ • High sensitivity: 0.5...2.5 g/cm³
Flow velocity	Max. 6 m/s (with a viscosity of 10000 mPa.s)
Product connections	
Process connection	Thread G or NPT, ¾" or 1"; clamp 2"
Approvals and conformities	
Directives	
CE directive	Further information on the CE Directive can be found in chapter "2.3. Standards" on page 5
NAMUR recommendation	IEC 60947-5-6 (EN 50227)
Explosion protection	ATEX: EN 60079-0, EN 60079-11, EN 60079-26 Further information can be found in chapter "2.4. Explosion protection" on page 5.
Environment and installation	
Ambient temperature	• Operating on the housing: - 40...+ 70 °C (- 40...+ 158 °F) • Storage and transport: - 40...+ 80 °C (- 40...+ 176 °F)
Temperature derating	Further information can be found in chapter "5.1. Temperature derating diagram" on page 8.
Relative air humidity	20...85 %, without condensation
Degree of protection according to IEC/EN 60529	IP66/IP67 with M20 × 1.5 gland mounted and tightened

DTS 1000086887 EN Version: T Status: RL (released | freigegeben | valide) printed: 20.05.2026

1.3. Vibrating level switch with relay output

Product properties	
Operating mode	Adjustable • A = max. detection or overflow/overfill protection • B = min. detection or dry run protection
Electrical data	
Operating voltage	20...253 V AC, 50/60 Hz or 20...72 V DC (at U > 60 V DC the ambient temperature must be max. + 50 °C (+ 122 °F))
Protection class according to IEC 61010-1	I
Power consumption	1...8 VA (AC); approx. 1.5 W (DC)
Switching voltage	Max. 253 V AC/DC
Switching current	Max. 3 A (AC, cos phi > 0.9), 1 A (DC)
Breaking power	• Min. 50 mW • Max. 750 VA AC, 40 W DC (with U < 40 V DC)
Output	Relay (DPDT), 2 floating SPDTs
Product connections	
Electrical connection	2 cable glands M20 × 1.5

1.4. Vibrating level switch with NAMUR output

Product properties	
Operating mode	NAMUR output adjustable to falling or rising characteristics • Min.: Rising characteristics (High current when wetted with liquid) • Max.: Falling characteristics (Low current when wetted with liquid)
Electrical data	
Operating voltage	• Voltage supply: via connection to an amplifier according to NAMUR IEC 60947-5-6, approx. 8.2 V • Open-circuit voltage: U_0 approx. 8.2 V • Short-circuit current: I_U approx. 8.2 mA
Protection class according to IEC 61010-1	II
Current consumption	• Falling characteristic: ≥ 2.2 mA (blade uncovered) / ≤ 1.0 mA (blade covered) • Rising characteristic: ≤ 1.0 mA (blade uncovered) / ≥ 2.2 mA (blade covered) • Fault signal: ≤ 1.0 mA
Output	2-wire current modulation according to NAMUR
Product connections	
Electrical connection	1 cable gland M20 × 1.5
Necessary processing system	NAMUR processing system according to IEC 60947-5-6 (EN 50227/DIN 19234)

DTS 1000086887 EN Version: T Status: RL (released | freigegeben | valide) printed: 20.05.2026

2. Approvals and conformities

2.1. General notes

- The approvals and conformities listed below must be stated when making enquiries. This is the only way to ensure that the product complies with all required specifications.
- Not all available variants of the device can be supplied with the below mentioned approvals or conformities.

2.2. Conformity

In accordance with the Declaration of Conformity, the product is compliant with the EU Directives.

2.3. Standards

The applied standards which are used to demonstrate compliance with the EU Directives are listed in the EU-Type Examination Certificate and/or the EU Declaration of Conformity.

2.4. Explosion protection

Approval	Description
	Optional: Explosion protection Ex marking of the components according to: **ATEX:** PTB 07 ATEX 2004X • II 1/2G Ex ia IIC T6 Ga/Gb • II 2G Ex ia IIC T6 Gb Measures for compliance with ATEX/IECEx requirements: see **Additional manual/Supplement ATEX/IECEx Type 8111** ▶ under "User manuals". The Ex. certification is only valid if the Bürkert device is used as described in the additional manual/supplement. Any unauthorized modifications made to the device will invalidate the Ex certification.

3. Materials

3.1. Bürkert resistApp

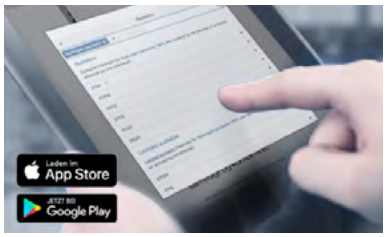

Bürkert resistApp – Chemical resistance chart

You want to ensure the reliability and durability of the materials in your individual application case? Verify your combination of media and materials on our website or in our resistApp.

Start chemical resistance check

DTS 1000086887 EN Version: T Status: RL (released | freigegeben | valide) printed: 20.05.2026

3.2. Material specifications

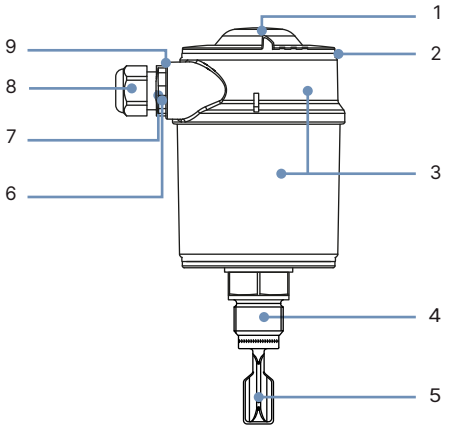

No.	Element	Material
1	Cover	PC
2	Seal between housing and housing cover	EPDM
3	Housing	Plastic PBT (Polyester), PPS and stainless steel 316L (1.4404)
4	Process connection	Stainless steel 316L (1.4435)
5	Tuning fork	Stainless steel 316L (1.4435)
6	Blind plug	PA
7	Ground terminal	Stainless steel 316L
8	Cable gland	PA
9	Cable gland seal	NBR
–	Process seal (not shown)	NBR with aramid fibres

4. Dimensions

4.1. G ¾" or NPT ¾" connection

Note:
Dimensions in mm, unless otherwise stated

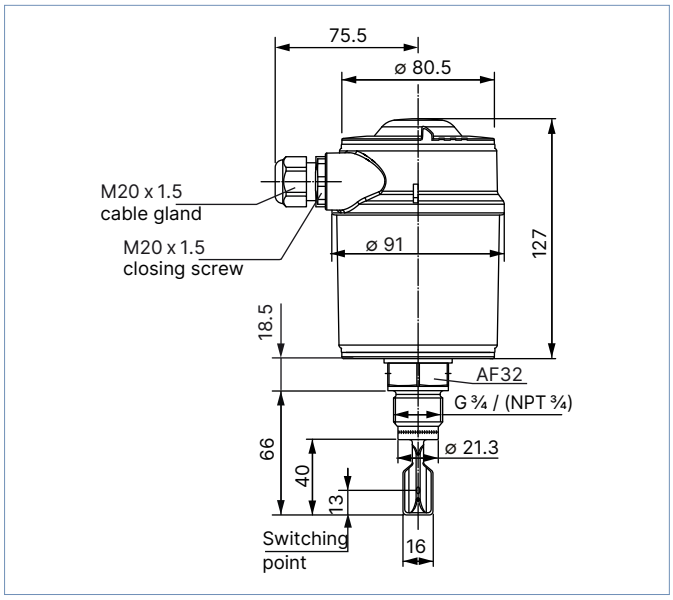

DTS 1000086887 EN Version: T Status: RL (released | freigegeben | valide) printed: 20.05.2026

4.2. G 1” or NPT 1” connection

Note:
Dimensions in mm, unless otherwise stated

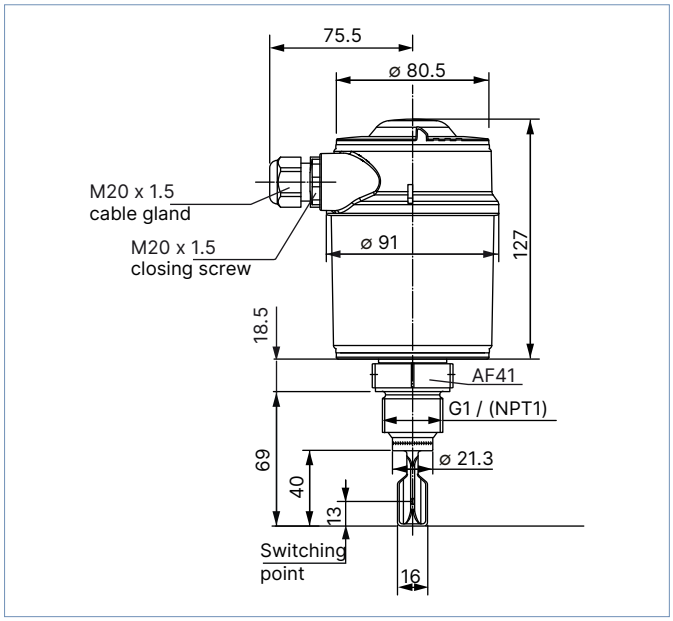

4.3. Clamp 2” connection

Note:
Dimensions in mm, unless otherwise stated

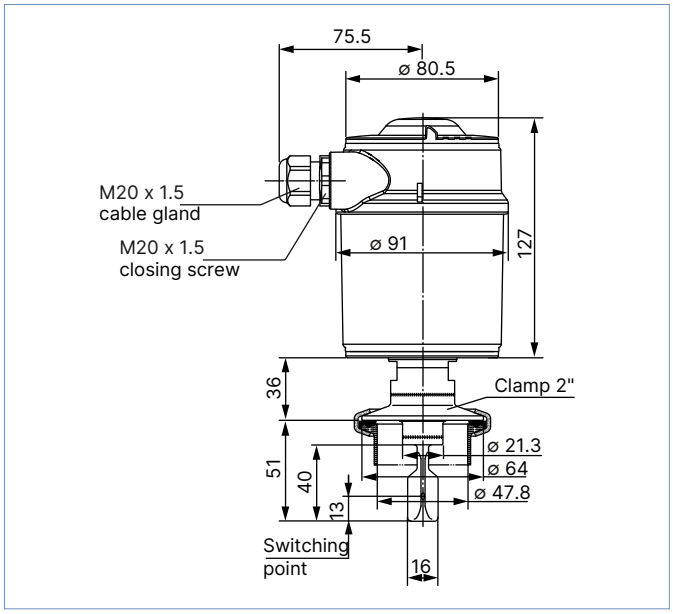

DTS 1000086887 EN Version: T Status: RL (released | freigegeben | valide) printed: 20.05.2026

5. Performance specifications

5.1. Temperature derating diagram

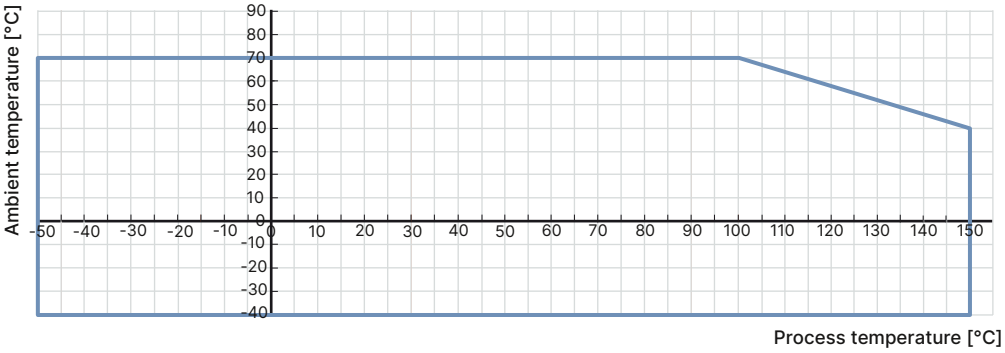

6. Product installation

6.1. Installation notes

The vibrating level switch Type 8111 can be installed in any position. The instrument only has to be mounted in such a way that the tuning fork is at the height of the desired switching point.

The tuning fork has lateral markings (notches) that indicate the switching point with vertical mounting. The switching point refers to water with the basic setting of the sensitivity switch ≥ 0.7 g/cm³.

Vertical installation	Horizontal installation
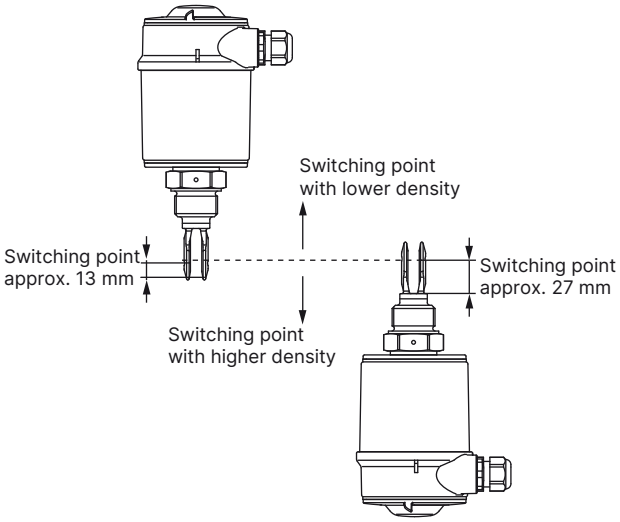	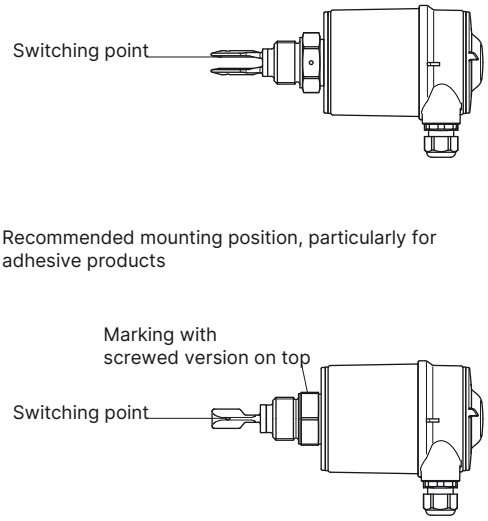

DTS 1000086887 EN Version: T Status: RL (released | freigegeben | valide) printed: 20.05.2026

7. Product operation

7.1. Measuring principle

The tuning fork is piezoelectrically energised and vibrates at a mechanical resonance frequency of approx. 1200 Hz. When the tuning fork is submerged in the product, the frequency changes. This change is detected by the integrated oscillator and converted into a switching command.

The integrated fault monitor detects the following faults:

- Interruption of the connection cable to the piezoelectric elements
- Extreme material wear on the tuning fork
- Breakage of the tuning fork
- Absence of vibration.

If one of these faults is detected or in case the power supply fails, the electronic system switches to a defined switching state, e.g. the relay de-energises (safe state).

8. Product accessories

Note:
The accessories must be ordered separately, see chapter "9.4. Ordering chart accessories" on page 10.

Accessory	Description
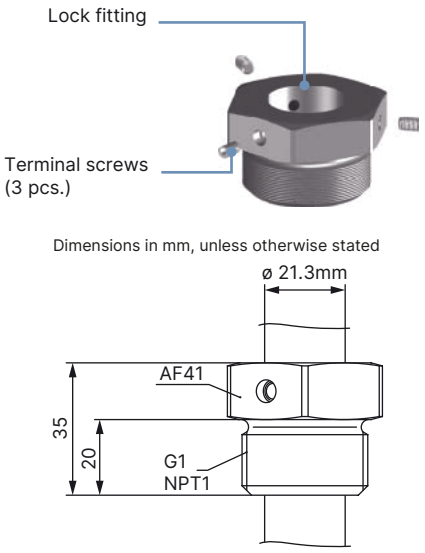	The lock fitting is a threaded fitting and can be used together with the vibration level switch Type 8111. It must only be used in unpressurised vessels. The wetted parts of the lock fitting are made of stainless steel (316L). With the lock fittings, sensors with tube extension can be fixed infinitely. The terminal screws protect the tube against sliding through. The following variants are available: Ø 21.3 mm - G 1 or 1 NPT (AF 41)

9. Ordering information

9.1. Bürkert eShop

Bürkert eShop – Easy ordering and quick delivery

You want to find your desired Bürkert product or spare part quickly and order directly? Our online shop is available for you 24/7. Sign up and enjoy all the benefits.

Order online now

DTS 1000086887 EN Version: T Status: RL (released | freigegeben | valide) printed: 20.05.2026

9.2. Bürkert product filter

Bürkert product filter – Get quickly to the right product

You want to select products comfortably based on your technical requirements?
Use the Bürkert product filter and find suitable articles for your application quickly and easily.

Try out our product filter

9.3. Ordering chart

Operating voltage	Process connection	Output	Electrical connection	Article no.
20...72 V DC / 20...250 V AC (5 A)	G ¾"	Double relay (DPDT), 2 floating SPDTs	2 cable glands M20 × 1.5	558110
	NPT ¾"			558111
	G 1"			558112
	NPT 1"			558113
	Clamp 2"			558114
8.2 V DC, via an isolating amplifier with NAMUR input	G ¾"	NAMUR signal - Ex variant, ATEX approval	1 cable gland M20 × 1.5	558115
	G 1"			558116

Further variants on request

Process connection
- Clamp 1", 1½"
- DIN 11851
- Flange
- SMS
- NEUMO BioControl® (a registered Trademark of NEUMO-Ehrenberg Group)

Hygienic
- Ra < 0.8 µm for G or NPT threaded connection
- Ra < 0.3 µm for Clamp connection

Material
ECTFE, enamel, Alloy C4 or PFA for flange connection

Temperature
- 50...+ 250 °C

Additional
With transistor output

9.4. Ordering chart accessories

Description	Article no.
Set with two adapters M20 × 1.5 /NPT ½", two neoprene flat seals for cable gland or plug and two screw plugs M20 × 1.5	551782
Lock fitting, only for pressureless handling, - 50...150 °C, G 1"	558218
Lock fitting, only for pressureless handling, - 50...150 °C, NPT 1"	558219

DTS 1000086887 EN Version: T Status: RL (released | freigegeben | valide) printed: 20.05.2026