bürkert
FLUID CONTROL SYSTEMS

Pneumatically operated 2-way angle seat control valve ELEMENT

- Excellent combination of good control characteristic and high flow rate
- Long service life
- Control units can be mounted directly without external tubing
- Stainless steel housing with thread, clamp and weld end connection

Product variants described in the data sheet may differ from the product presentation and description.

Can be combined with

Type 8696
Digital electropneumatic positioner for integrated mounting on process control valves

Type 8693
Digital electropneumatic process controller for integrated mounting on process control valves

Type 8692
Digital electropneumatic positioner for integrated mounting on process control valves

Type 8694
Digital electropneumatic positioner for integrated mounting on process control valves

Type 8792
Digital electropneumatic positioner SideCONTROL

Type 8793
Digital electropneumatic Process Controller SideCONTROL

Type 8791
Digital electropneumatic positioner SideCONTROL

Type 8802
Continuous control valve systems ELEMENT – overview

Type description

In line with Bürkert's philosophy for modular valves and sensors the construction of Type 2300 angle-seat valve fulfils tough criteria for process environments. Unrivalled cycle life and sealing integrity is guaranteed by the proven self adjusting packing gland. The parabolic trim results in a flow characteristic approximately 35 % larger than conventional control valves. It is available in either stainless steel on stainless steel or with a durable PTFE seal for tight shut-off. The design enables the easy integration of automation modules whether they are digital electropneumatic positioner or process controller. The fully integrated system has a compact and smooth design, integrated pneumatic lines, IP65/67, NEMA Type 4X protection class and superior chemical resistance. This system has been engineered for reliable accurate control in applications where high flow rate is an advantage.

DTS 1000475061 EN Version: L Status: RL (released | freigegeben | valide) printed: 22.12.2025

© Christian Bürkert GmbH & Co. KG, Subject to alteration

Visit product website

Table of contents

1. General technical data 3

2. Control functions 4

3. Approvals and conformities 4

3.1. General notes 4
3.2. Conformity 4
3.3. Standards 4
3.4. Explosion protection 4
3.5. Drinking water 5
3.6. Foods and beverages/Hygiene 5
3.7. Others 5
DNV GL classification 5
Oxygen 5
TA Luft 5

4. Materials 6

4.1. Bürkert resistApp 6
4.2. Material specifications 6

5. Dimensions 7

5.1. Actuator 7
Valve system Continuous ELEMENT 8
5.2. Body with threaded connection 10
5.3. Body with welded connection 11
5.4. Body with clamp connection 12

6. Performance specifications 13

6.1. Fluidic data 13
Flow characteristics 13
Overview of fluidic data for flow below seat (for liquids, steam and gases) 13
Pilot pressure diagrams with flow direction below seat (control function B) 14
6.2. Operating limits 15
Operating limits for medium temperature and operating pressure 15
Operating limits for ambient and medium temperature 16
Operating limits for seat seal 16
Operating limits for optional variants 17

7. Product accessories 17

8. Networking and combination with other Bürkert products 21

9. Ordering information 23

9.1. Bürkert eShop 23
9.2. Bürkert product filter 23
9.3. Bürkert Product Enquiry Form 23
9.4. Ordering chart threaded connection 24
Valves with flow direction below seat 24
9.5. Ordering chart welded connection 26
Valves with flow direction below seat 26
9.6. Ordering chart clamp connection 28
Valves with flow direction below seat 28

DTS 1000475061 EN Version: L Status: RL (released | freigegeben | valide) printed: 22.12.2025

1. General technical data

Product properties	
Dimensions	Further information can be found in chapter "5. Dimensions" on page 7.
Material	Further information can be found in chapter "4. Materials" on page 6.
Design	Angle seat control valve
Nominal diameter (port connection)	DN 10...DN 65, NPS ⅜...NPS 2½
Safety setting in case of power failure	Normally closed (control function A), normally open (control function B)
Flow direction	Flow to open (below seat)
Performance data	
Operating pressure	0 bar(g)...25 bar(g), vaccum variants...- 0.9 bar(g) (option) (see "6.1. Fluidic data" on page 13)
Nominal pressure	PN 25 (DIN EN 1333), Class 150 (DIN EN 1759)
Pilot pressure	5.6 bar(g)...7 bar(g) (see "6.1. Fluidic data" on page 13)
Seat leakage	DIN EN 60534 - 4:2006 (see "6.1. Fluidic data" on page 13)
Leakage class III and IV	Stainless steel
Leakage class VI	PTFE and PEEK
K_V value	5 m³/h...90 m³/h (see "6.1. Fluidic data" on page 13)
Operating characteristic	Modified equal percentage
Medium data	
Process medium	Steam, water, neutral gases, alcohols, oils, fuels, hydraulic fluids, salt solutions, alkalis, organic solvents and oxygen
Medium temperature	- 40 °C...+ 230 °C (see "6.2. Operating limits" on page 15)
Viscosity	Max. 600 mm²/s
Control medium	Air, neutral gases
Product connections	
Port connection	
Threaded connection	G (DIN ISO 228 - 1) NPT (ASME B1.20.1) RC (ISO 7 - 1)
Welded connection	DIN EN ISO 1127 / ISO 4200 / DIN 11866 series B DIN 11850 - 2 / DIN 11866 series A ASME BPE / DIN 11866 series C SMS 3008
Clamp connection	DIN 32676 series B (pipe: ISO 4200) DIN 32676 series A (pipe: DIN 11850 - 2) ASME BPE
Approvals and conformities	
Further information can be found in chapter "3. Approvals and conformities" on page 4.	
Material certificate	2.2, 3.1
Environment and installation	
Ambient temperature	- 10 °C...+ 80 °C (with remote sensor Type 8798 for positioner or process controller, Type 8791/8792/8793) - 10 °C...+ 55 °C (with positioner or process controller, Type 8692/8693/8694)
Degree of protection	IP65/67
Installation position	As required, preferably with actuator in upright position

DTS 1000475061 EN Version: L Status: RL (released | freigegeben | valide) printed: 22.12.2025

2. Control functions

Symbol	Description	
Flow direction below seat for fluids, steam and gases		
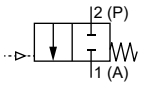	**Control function A (CF A)** Pneumatically operated 2/2-way on/off valve Flow direction below seat Normally closed by spring force	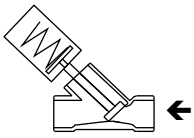
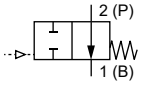	**Control function B (CF B)** Pneumatically operated 2/2-way on/off valve Flow direction below seat Normally opened by spring force	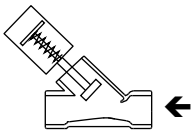

3. Approvals and conformities

3.1. General notes

- The approvals and conformities listed below must be stated when making enquiries. This is the only way to ensure that the product complies with all required specifications.
- Not all available variants can be supplied with the below mentioned approvals or conformities.

3.2. Conformity

In accordance with the Declaration of Conformity, the product is compliant with the EU Directives. This includes the following directives:

- Pressure Equipment Directive 2014/68/EU
- Machinery Directive 2006/42/EC

3.3. Standards

The applied standards which are used to demonstrate compliance with the EU Directives are listed in the EU-Type Examination Certificate and/or the EU Declaration of Conformity.

3.4. Explosion protection

Approval	Description
	Optional: Explosion protection (valid for the variable code PX51) As a category 2 device suitable for zone 1/21 and zone 2/22. **ATEX:** EPS 18 ATEX 2 008 X II 2G Ex h IIC T4...T2 Gb II 2D Ex h IIIC T135 °C...T300 °C Db **IECEx:** IECEx EPS 18.0007X Ex h IIC T4...T2 Gb Ex h IIIC T135 °C...T300 °C Db

Temperature class	T2	T3	T4
Maximum surface temperature	+ 300 °C	+ 200 °C	+ 135 °C
Ambient temperature	- 40...+ 130 °C	- 40...+ 130 °C	- 40...+ 100 °C
Maximum medium temperature	+ 285 °C	+ 185 °C	+ 125 °C

Note: The ambient and medium temperature range may be limited by non-ex-relevant specifications. Observe the Operating Instructions.

DTS 1000475061 EN Version: L Status: RL (released | freigegeben | valide) printed: 22.12.2025

3.5. Drinking water

Conformity	Description
H_2O	**Suitable for use in drinking water applications** The materials comply with the assessment principles (UBA) for materials in contact with drinking water (TrinkwasserV). **Stainless steel body** PF39: Suitable for products with medium temperature up to 85 °C (hot water)

3.6. Foods and beverages/Hygiene

Conformity	Description
FDA	**FDA – Code of Federal Regulations (valid for the variable code PL02)** All wetted materials are compliant with the Code of Federal Regulations published by the FDA (Food and Drug Administration, USA) according to the manufacturer's declaration.
USP	**United States Pharmacopeial Convention (USP) (valid for the variable code PL04)** All wetted materials are biocompatible according to the manufacturer's declaration.
	EC Regulation 1935/2004 of the European Parliament and of the Council (valid for the variable code PL01, PL02) All wetted materials are compliant with EC Regulation 1935/2004/EC according to the manufacturer's declaration.
	China food GB Standards of the People's Republic of China (valid for the variable code PL10) All wetted materials are compliant with the requirement of China food GB Standards according to the manufacturer's declaration.

3.7. Others

DNV GL classification

Approval	Description
TYPE APPROVED PRODUCT DNV DNV.COM/AF	**DNV GL classification – Ships, offshore units, and high speed and light craft** The products are accepted for installation on all vessels classed by DNV GL.

Oxygen

Conformity	Description
O_2	**Optional: Suitability for oxygen (valid for the variable code NL02)** The products are suitable for use with gaseous oxygen, according to the manufacturer's declaration.

TA Luft

Conformity	Description
TA Luft	**Technical instruction on air quality control (valid for the variable code PM01)**

DTS 1000475061 EN Version: L Status: RL (released | freigegeben | valide) printed: 22.12.2025

4. Materials

4.1. Bürkert resistApp

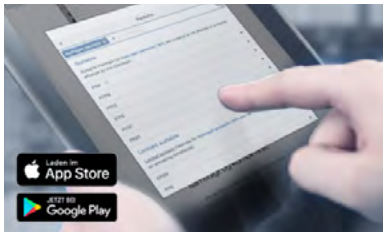

Bürkert resistApp – Chemical resistance chart

You want to ensure the reliability and durability of the materials in your individual application case? Verify your combination of media and materials on our website or in our resistApp.

Start chemical resistance check

4.2. Material specifications

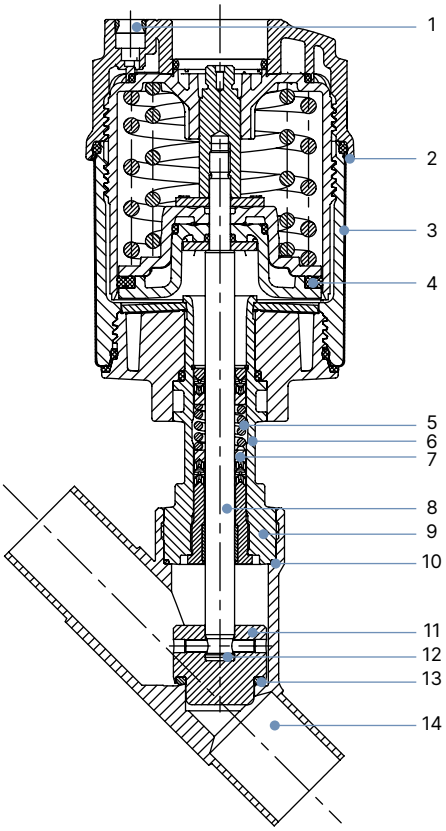

No.	Element	Material
1	Pilot air ports	Push-in connector PP (standard)
2	Actuator cover	PPS
3	Actuator casing	Stainless steel 1.4561 (316Ti)
4	Piston seal	FKM
5	Spring	Stainless steel 1.4310
6	Pipe	Stainless steel CF3M
7	Packing gland	PTFE V-rings (filled), with spring compensation
8	Spindle	Stainless steel 1.4401 (316)/1.4404 (316L)
9	Spindle guide	Stainless steel 1.4404 (316L)
10	Body seal	Graphite or PTFE
11	Control cone	Stainless steel 1.4571
12	Spring pin	Stainless steel 1.4310
13	Seat seal	Stainless steel 1.4571, PTFE or PEEK
14	Valve body	Stainless steel CF3M

DTS 1000475061 EN Version: L Status: RL (released | freigegeben | valide) printed: 22.12.2025

5. Dimensions

5.1. Actuator

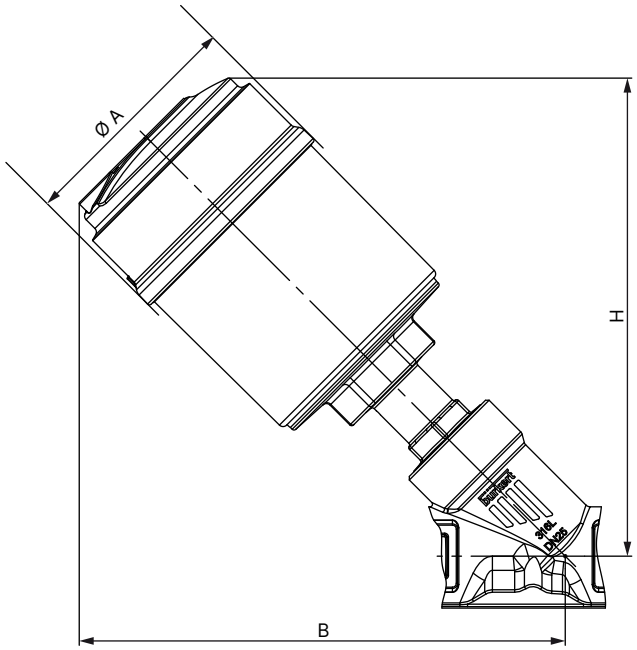

Nominal diameter (port connection)		Actuator size	Ø A	B [1.)]	H [1.)]
DN	NPS				
10	⅜	50 (D)	64.5	166	163
		70 (M)	91	182	178
15	½	50 (D)	64.5	166	163
		70 (M)	91	182	178
20	¾	50 (D)	64.5	174	171
		70 (M)	91	189	186
25	1	50 (D)	64.5	175	173
		70 (M)	91	191	188
		90 (N)	120	228	227
32	1¼	90 (N)	120	201	197
		130 (P)	159	243	242
40	1½	90 (N)	120	247	246
		130 (P)	159	296	296
50	2	90 (N)	120	262	261
		130 (P)	159	312	312
65	2½	130 (P)	159	342	342

1.) The dimensions for B and H are maximum dimensions and may be up to 6 mm less, depending on the nominal diameter (port connection) and standard.

DTS 1000475061 EN Version: L Status: RL (released | freigegeben | valide) printed: 22.12.2025

Valve system Continuous ELEMENT

Note:

- Dimensions in mm, unless otherwise stated
- Please note actuator size A in table "5.1. Actuator" on page 7

With positioner TopControl Type 8692 ▸
or with process controller TopControl Type 8693 ▸

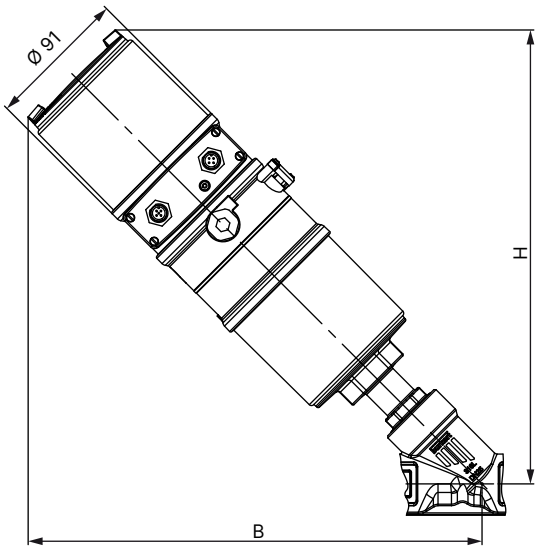

With positioner TopControl Basic Type 8694 ▸

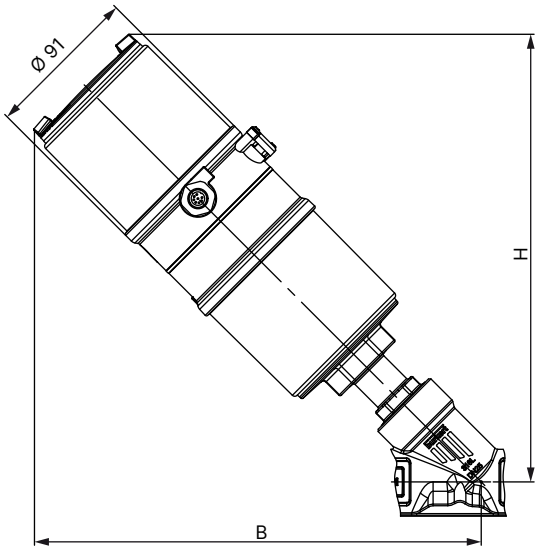

With positioner TopControl Type 8696 ▸

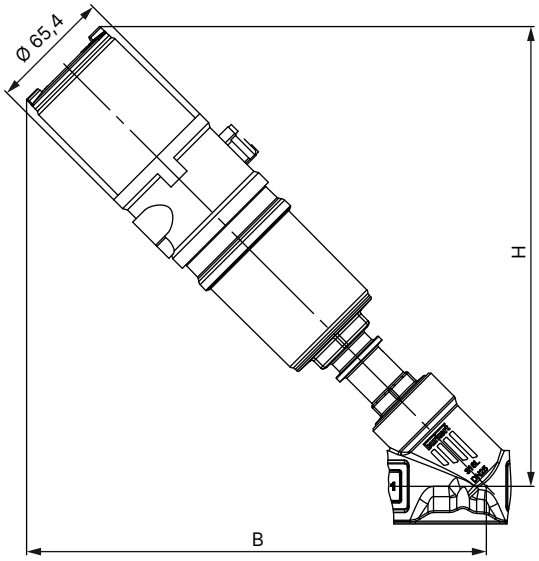

Nominal diameter (port connection)		Actuator size	B/H [1.)] with	
DN	NPS		Type 8692 or Type 8693	Type 8694 or Type 8696
10	⅜	50 (D)	–	239
		70 (M)	285	257
15	½	50 (D)	–	239
		70 (M)	285	257
20	¾	50 (D)	–	247
		70 (M)	293	264
25	1	50 (D)	–	249
		70 (M)	295	266
		90 (N)	332	303
32	1¼	90 (N)	304	276
		130 (P)	347	318
40	1½	90 (N)	351	322
		130 (P)	387	359
50	2	90 (N)	366	337
		130 (P)	403	375
65	2½	130 (P)	433	405

1.) The dimensions for B and H are maximum dimensions and may be up to 6 mm less, depending on the nominal diameter (port connection) and standard.

DTS 1000475061 EN Version: L Status: RL (released | freigegeben | valide) printed: 22.12.2025

With remote positioner SideCONTROL Type 8792 ▸ or with remote process controller SideCONTROL Type 8793 ▸

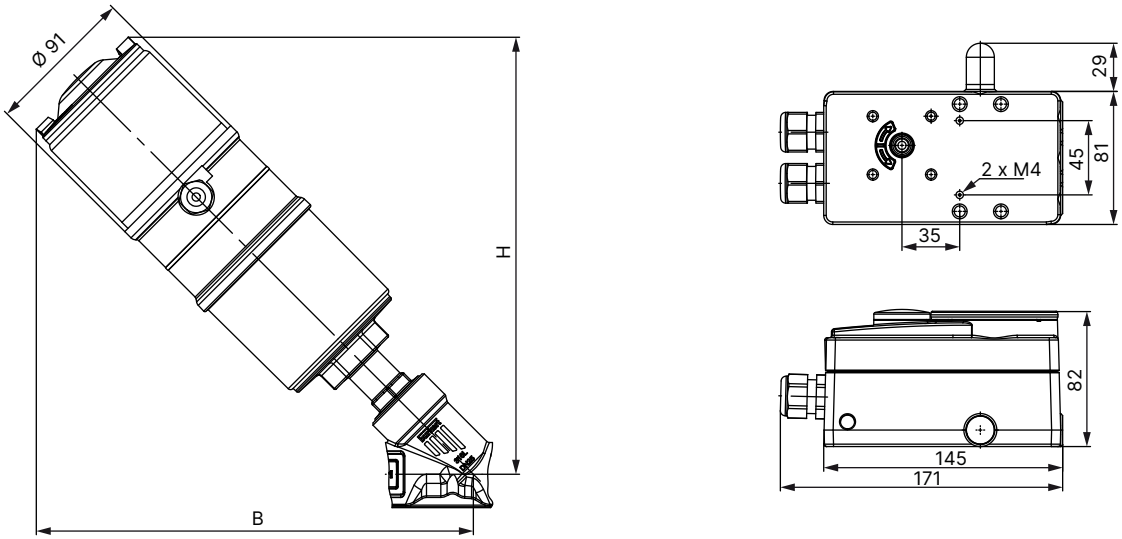

Nominal diameter (port connection)		Actuator size	B / H with 8792 or 8793
DN	NPS		
10	⅜	70 (M)	257
15	½	70 (M)	257
20	¾	70 (M)	264
25	1	70 (M)	266
		90 (N)	303
32	1¼	90 (N)	276
		130 (P)	318
40	1½	90 (N)	322
		130 (P)	359
50	2	90 (N)	337
		130 (P)	375
65	2½	130 (P)	405

1.) The dimensions for B and H are maximum dimensions and may be up to 6 mm less, depending on the nominal diameter (port connection) and standard.

DTS 1000475061 EN Version: L Status: RL (released | freigegeben | valide) printed: 22.12.2025

5.2. Body with threaded connection

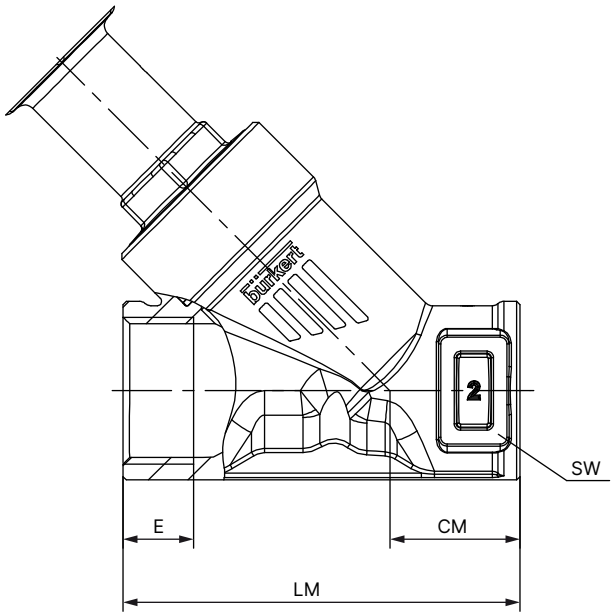

Nominal diameter (port connection)		G (DIN ISO 228 - 1) NPT (ASME B1.20.1) RC (ISO 7 - 1)					
		E			CM	LM	SW
DN	NPS	[G]	[NPT]	[RC]			
15	½	14	13.7	13.2	24	65	27
20	¾	16	14.0	14.5	27	75	34
25	1	18	16.8	16.8	29.5	90	41
32	1¼	16	17.3	19.1	36	110	50
40	1½	18	17.3	19.1	35	120	55
50	2	24	17.6	23.4	45	150	70
65	2½	26	23.7	26.7	57	185	85

DTS 1000475061 EN Version: L Status: RL (released | freigegeben | valide) printed: 22.12.2025

5.3. Body with welded connection

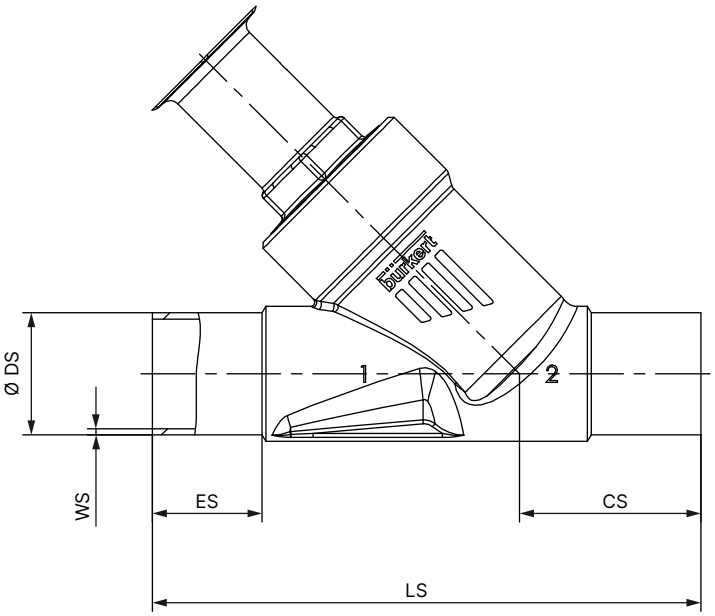

Nominal diameter (port connection)	DIN EN ISO 1127 / ISO 4200 / DIN 11866 series B					DIN 11850 - 2 / DIN 11866 series A				
DN	ES	CS	LS	Ø DS	WS	ES	CS	LS	Ø DS	WS
15	19	34	100	21.3	1.6	19	34	100	19	1.5
20	20	39	115	26.9	1.6	20	39	115	23	1.5
25	26	43	130	33.7	2.0	26	43	130	29	1.5
32	26	45	145	42.4	2.0	26	45	145	35	1.5
40	26	49	160	48.3	2.0	26	49	160	41	1.5
50	26	50	175	60.3	2.0	26	50	175	53	1.5
65	26	50	210	76.1	2.3	26	50	210	70	2

Nominal diameter (port connection)	ASME BPE / DIN 11866 series C				
NPS	ES	CS	LS	Ø DS	WS
½	30	46	135	12.7	1.65
¾	30	52	145	19.05	1.65
1	30	51	152	25.4	1.65
1½	30	60	182	38.1	1.65
2	30	64	210	50.8	1.65
2½	26	56	230	63.5	1.65

DTS 1000475061 EN Version: L Status: RL (released | freigegeben | valide) printed: 22.12.2025

5.4. Body with clamp connection

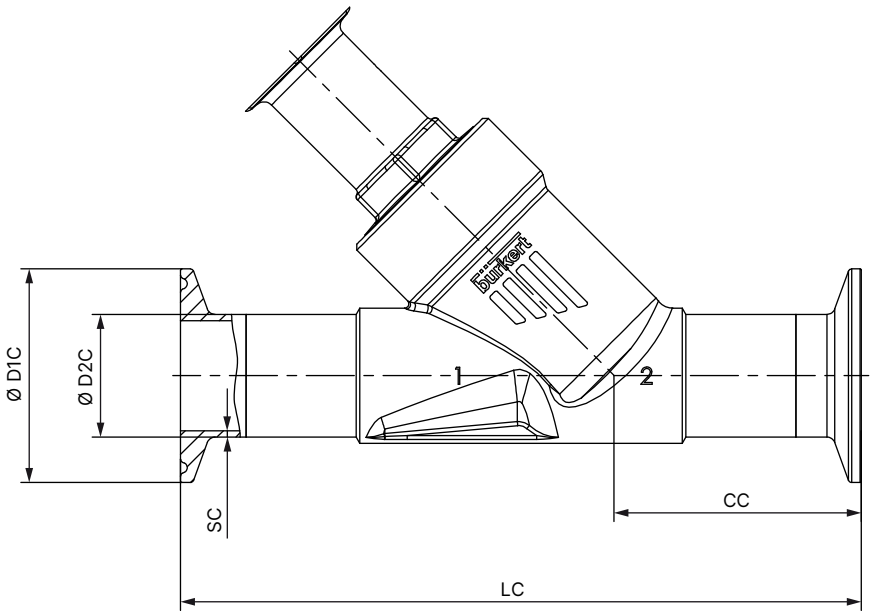

Nominal diameter (port connection)	Clamp: DIN 32676 series B Pipe: DIN EN ISO 1127 / ISO 4200 / DIN 11866 series B					Clamp: DIN 32676 series A Pipe: DIN 11850 - 2 / DIN 11866 series A				
DN	LC	CC	Ø D1 C	ØD2 C	SC	LC	CC	Ø D1 C	Ø D2 C	SC
15	156	49.0	50.5	21.3	1.6	130	49.5	34.0	19	1.5
20	150	56.5	50.5	26.9	1.6	150	57.0	34.0	23	1.5
25	160	58.0	50.5	33.7	2.0	160	58.5	50.5	29	1.5
32	200	57.5	50.5	42.4	2.0	180	58.0	50.5	35	1.5
40	200	69.0	64.0	48.3	2.0	200	69.5	50.5	41	1.5
50	230	77.5	77.5	60.3	2.6	230	78.0	64.0	53	1.5

Nominal diameter (port connection)	Clamp: ASME BPE Pipe: ASME BPE / DIN 11866 series C				
NPS	LC	CC	Ø D1 C	Ø D2 C	SC
½	130	49.0	25.0	12.7	1.65
¾	150	56.5	25.0	19.05	1.65
1	160	58.0	50.5	25.4	1.65
1½	200	69.0	50.5	38.1	1.65
2	230	77.5	64.0	50.8	1.65

DTS 1000475061 EN Version: L Status: RL (released | freigegeben | valide) printed: 22.12.2025

6. Performance specifications

6.1. Fluidic data

Flow characteristics

Note:

- Modified equal percentage flow characteristic.
- Higher flow values compared to globe control valves

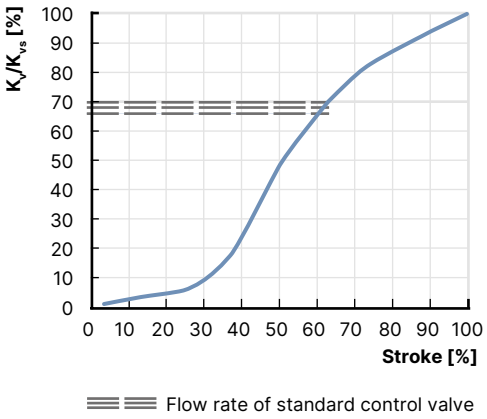

Overview of fluidic data for flow below seat (for liquids, steam and gases)

Note:

- K_V value [m³/h]: measurement with water according to DIN EN 60534 - 2 - 4
- Operating limits (see "6.2. Operating limits" on page 15)

Nominal diameter (port connection)		Actuator size Ø	Operating pressure max. CF A (seat leakage class)			K_V value at stroke [m³/h]										K_{VS} value
			Seat seal													
			Stainless steel	PTFE	PEEK											
DN	NPS	[mm]	[bar(g)]			5 %	10 %	20 %	30 %	40 %	50 %	60 %	70 %	80 %	90 %	[m³/h]
ASME BPE (12.7 mm x 1.65 mm / 0.5" x 0.065")																
15	½	50 (D)	16 (IV)	16 (VI)	10 (VI)	0.22	0.24	0.30	0.56	1.2	1,5	1,5	1,5	1,5	1,5	1,5
		70 (M)	25 (IV)	25 (VI)	25 (VI)											
All standards																
15	½	50 (D)	16 (IV)	16 (VI)	10 (VI)	0.16	0.17	0.22	0.40	1.2	2.7	3.5	4.0	4.5	4.8	5.0
		70 (M)	25 (IV)	25 (VI)	25 (VI)											
20	¾	70 (M)	25 (IV)	25 (VI)	10 (VI)	0.26	0.27	0.40	1.1	4.0	5.9	7.2	8.3	9.1	9.6	10.0
		90 (N)	25 (IV)	25 (VI)	25 (VI)											
25	1	70 (M)	12 (IV)	12 (VI)	7 (VI)	0.34	0.36	0.62	1.5	5.2	8.9	11.5	13.0	14.2	15.4	16.0
		90 (N)	25 (IV)	25 (VI)	20 (VI)											
32	1¼	70 (M)	6 (III)	6 (VI)	–	0.43	0.52	0.82	1.4	4.0	9.3	13.8	16.4	19.2	21.5	23.0
		90 (N)	16 (IV)	16 (VI)	10 (VI)											
		130 (P)	25 (IV)	25 (VI)	20 (VI)											
40	1½	90 (N)	12 (III)	12 (VI)	7 (VI)	0.47	0.62	1.1	2.6	10.0	17.0	21.5	25.5	29.0	31.5	34.0
		130 (P)	25 (IV)	25 (VI)	20 (VI)	0.48	0.66	1.4	5.1	14.0	20.0	24.5	28.5	31.5	34.5	36.0
50	2	90 (N)	7 (III)	7 (VI)	–	0.85	1.1	1.6	2.7	10.2	20.0	28.5	35.5	40.5	45.0	49.0
		130 (P)	25 (20 [1.)]) (IV)	25 (20 [1.)]) (VI)	20 (VI)	0.87	1.2	1.8	4.0	15.2	26.0	35.0	40.5	45.0	48.0	53
65	2½	130 (P)	16 (15 [1.)]) (IV)	16 (15 [1.)]) (VI)	10 (VI)	1.7	2.0	6.5	20.0	35.0	48.0	58	67	75	83	90

1.) According to pressure equipment directive 97/23/EC for compressible fluids of group 1 (dangerous gases and vapours) according to article 3, number 1.3, letter a, first indent)

DTS 1000475061 EN Version: L Status: RL (released | freigegeben | valide) printed: 22.12.2025

Pilot pressure diagrams with flow direction below seat (control function B)

Actuator size Ø 50 mm
Maximum control pressure 7 bar(g)

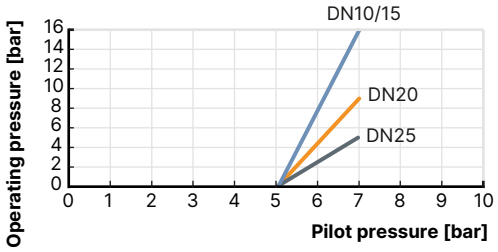

Actuator size Ø 70 mm
Maximum control pressure 7 bar(g)

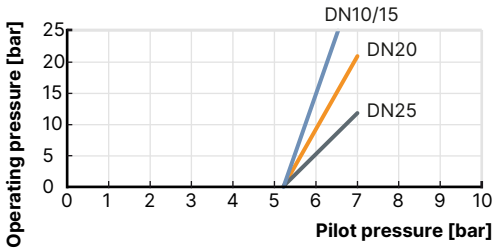

Actuator size Ø 90 mm
Maximum control pressure 7 bar(g)

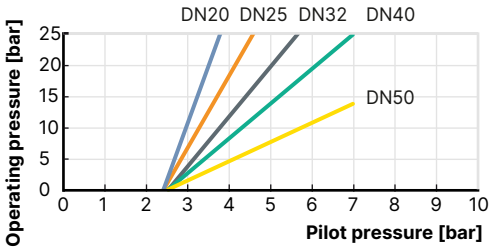

Actuator size Ø 130 mm
Maximum control pressure 7 bar(g)

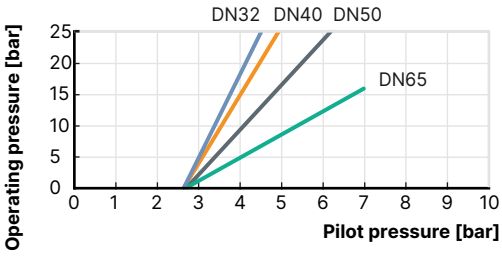

DTS 1000475061 EN Version: L Status: RL (released | freigegeben | valide) printed: 22.12.2025

6.2. Operating limits

Operating limits for medium temperature and operating pressure

In addition to the maximum operating pressures, the operating range of Bürkert process valves is limited by the nominal pressure according to the relevant standard.

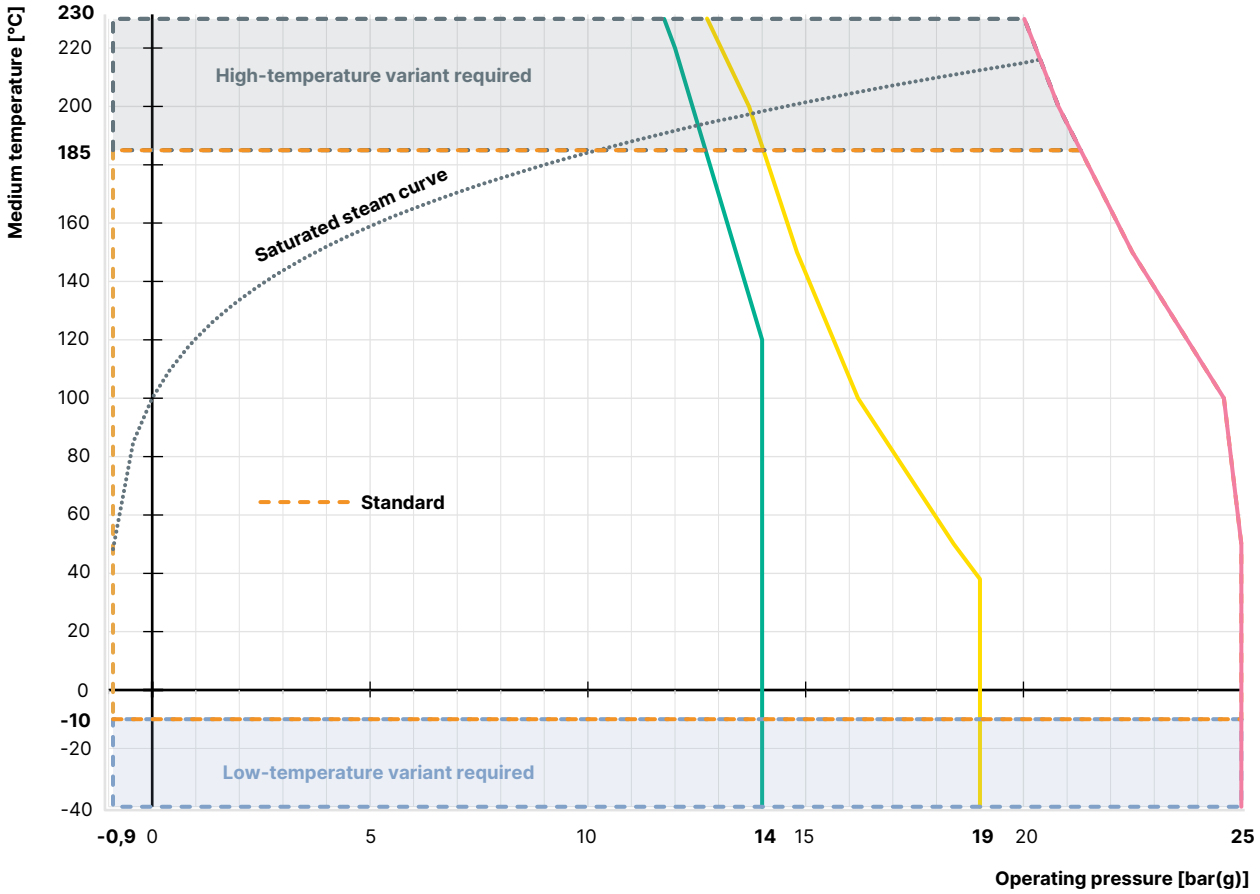

Operating limits for PN25 according to DIN EN 12516-1
Operating limits for flange 10K according to JIS B 2220
Operating limits for Class 150 according to ASME B16.34
Saturated steam curve for water

DTS 1000475061 EN Version: L Status: RL (released | freigegeben | valide) printed: 22.12.2025

Operating limits for ambient and medium temperature

ELEMENT Actuator

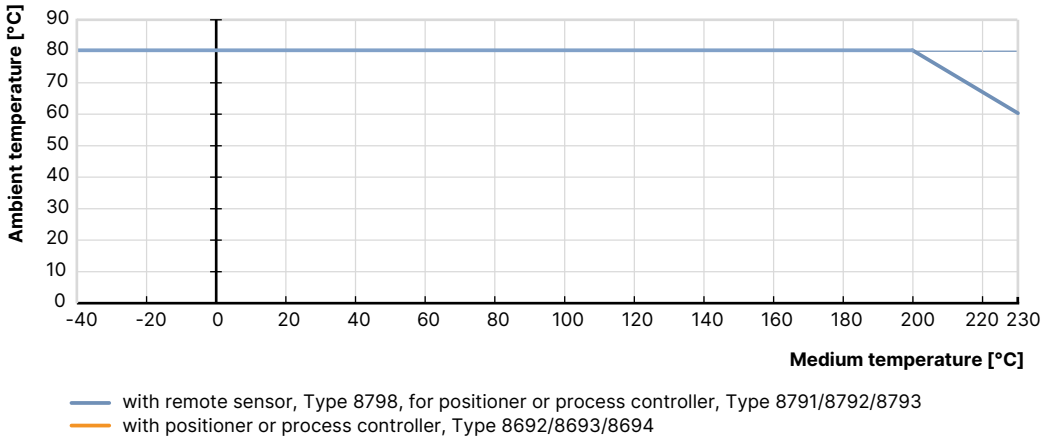

Operating limits for seat seal

Tight sealing required	Leakage class (DIN EN 60534 - 4)	Medium temperature	Seat seal
No An additional shut-off valve is recommended	III/IV (metal seals) Metal-sealed valves have larger leakages (0.1 % or 0.01 % of the nominal flow rate are permissible). Metallic seals are impervious even under demanding process conditions.	- 40...+ 230 °C	Stainless steel
Yes An additional shut-off valve is often unnecessary.	VI (soft seals) By using plastics as sealing material, the control valves can close tightly. Their use is not recommended in cases of increased erosion due to demanding process conditions.	- 40...+ 130 °C (recommended for ≤ + 130 °C)	PTFE
		- 10...+ 230 °C (recommended for > + 130 °C)	PEEK

DTS 1000475061 EN Version: L Status: RL (released | freigegeben | valide) printed: 22.12.2025

Operating limits for optional variants

High-temperature variant
Thanks to an adaption of the packing gland, this variant is suitable for applications with steam, neutral gases and other heat transfer mediums up to + 230 °C.

Water variant
For applications with water up to + 200 °C, a special configuration of the packing gland increases service life significantly. It is recommended for water temperatures starting at + 85 °C.

Drinking water variant
Wetted materials are tested in contact with the medium are tested for suitability with drinking water up to + 85 °C.

Vacuum variant
Without leakage bore, this design is suitable for pressures down to - 0.9 bar(g).

Low-temperature variant
Suitable for minimum medium temperatures down to - 40 °C

Variant for oxygen
Non-metallic wetted materials are tested for suitability with oxygen and are suitable for operating pressures up to 25 bar(g) and medium temperatures up to+ 60 °C.

DTS 1000475061 EN Version: L Status: RL (released | freigegeben | valide) printed: 22.12.2025

7. Product accessories

Process controller TopControl	
Type 8693 ▸ Actuator size Ø 70/90/130 mm	
	The intelligent process controller Type 8693 is designed for integrated mounting on pneumatic actuators from the process control valve series Type 23xx/2103 and especially for the requirements of hygienic process conditions. Using the TUNE functions, the positioner and process controller can be initialised automatically. Easy operation and selection of additional software functions as well as parameterisation are carried out via the large graphic display and a touch keypad. Device configuration and parameterisation can also be conveniently carried out by the Bürkert Communicator software via a PC interface. **Features** • Contactless position sensor • Universal control system for single and double acting actuators • Highly dynamic actuating system without internal pilot air consumption in the balanced state • Integrated diagnostic functions for valve monitoring • Automatic initialisation of the positioner and process controller using the TUNE function • Safeguarding in the event of failure of the electrical or pneumatic auxiliary power • PROFIBUS DPV1, EtherNet/IP, PROFINET, Modbus TCP, Bürkert system bus (büS) • Compact and robust hygienic stainless steel design **Customer benefits** • Quick and easy commissioning • Intuitive and simple operation via a graphic display with backlight and touch keypad • High system availability due to increased drive service life by means of spring chamber ventilation • Guaranteed reliability and predictable maintenance through valve monitoring and diagnostics • Easy maintenance and process monitoring

Positioner TopControl

Type 8692 ▸ Actuator size Ø 70/90/130 mm

The intelligent electropneumatic positioner Type 8692 is designed for integrated attachment to pneumatic actuators of the process control valve series Type 23xx/2103 and especially for the requirements of hygienic process conditions. The positioner can be initialised automatically using the TUNE function. Easy operation and the selection of the extensive additional software functions as well as parameterisation are carried out via the large graphic display and the touch keypad. The device configuration and parameterisation can also be conveniently carried out using the Bürkert Communicator software via a PC interface.

Features

- Contactless position sensor
- Universal positioning system for single and double-acting actuators in the balanced state
- Highly dynamic positioning system without internal pilot air consumption
- Integrated diagnostic functions for valve monitoring
- Automatic initialisation of the positioner by using the TUNE function
- Safeguard in the event of failure of the electrical or pneumatic auxiliary power
- PROFIBUS DPV1, EtherNet/IP, PROFINET, Modbus TCP, Bürkert system bus (büS)
- Compact and robust hygienic stainless steel design

Customer benefits

- Quick and easy commissioning
- Intuitive and simple operation via graphic display with backlight and touch keypad
- High system availability due to increased drive service life by means of spring chamber ventilation
- Guaranteed reliability and predictable maintenance through valve monitoring and diagnostics

Positioner TopControl BASIC

Type 8694 ▸ Actuator size Ø 70/90/130 mm

The compact positioner Type 8694/8696 is designed for integrated attachment to pneumatic actuators of the Type 23xx/2103 process control valve series and especially for the requirements of hygienic process conditions. Operation and parameterisation are performed via push buttons and DIP switches. The device configuration and parameterisation can also be conveniently carried out using the Bürkert Communicator software via a PC interface.

Features

- Contactless position sensor
- Universal positioning system for single and double-acting actuators
- Ultra dynamic positioning system without internal pilot air consumption
- AS-Interface, IO-Link, Bürkert system bus (büS) (only 8694)
- Compact and robust hygienic stainless steel design

Customer benefits

- Simple and safe commissioning using the teach function
- Minimum space requirement in the plant pipework for more flexibility in plant design
- High system availability due to increased drive service life by means of spring chamber ventilation

Type 8696 ▸ Actuator size Ø 50 mm

DTS 1000475061 EN Version: L Status: RL (released | freigegeben | valide) printed: 22.12.2025

DTS 1000475061 EN Version: L Status: RL (released | freigegeben | valide) printed: 22.12.2025

Process controller SideCONTROL Remote

Type 8793 ▸ with remote sensor 8798 ▸ Actuator size Ø 70/90/130 mm

The intelligent digital positioner and process controller Type 8793 is designed for mounting on lift or swivel drives with standardisation in accordance with IEC 534 - 6 or VDI/VDE 3845 for demanding control tasks. The variant with remote position sensor Type 8798 is used to control Bürkert process control valves. It is operated via a graphic display with backlight. The initialisation of the positioner and process controller can be done automatically using the TUNE function. The type of controlled system is automatically recognised and the appropriate controller structure with the corresponding optimum parameter set is determined.

Features

- Universal control system for single and double acting actuators
- Integrated diagnostic functions for valve monitoring
- Automatic initialisation of the position and process controller using the TUNE function
- Ultra-dynamic actuating system without internal pilot air consumption
- Illuminated graphic display with backlight and touch keypad
- PROFIBUS DPV1, EtherNet/IP, PROFINET, Modbus TCP, Bürkert system bus (büS)
- Compact and robust design
- Adaptation according to IEC 534 - 6 or VDI/VDE 3845 for lift and swivel drives or as remote variant on Bürkert process valves

Customer benefits

- Quick and easy commissioning
- Intuitive and simple operation via graphic display with backlight and touch keypad
- Guaranteed reliability and scheduled maintenance thanks to valve monitoring and diagnostics
- Easy maintenance and process monitoring
- Long service life

Positioner SideCONTROL Remote

Positioner Type 8792 ▸ with remote sensor Type 8798 ▸ Actuator size Ø 70/90/130 mm

The intelligent digital positioner and process controller Type 8792 is designed for attachment to lift and swivel drives with standardisation according to IEC 534 - 6 or VDI/VDE 3845 for demanding control tasks. The Type 8798 variant with remote position sensor is used to control Bürkert process control valves. It is operated via a graphic display with backlight. The initialisation of the positioner and process controller can be done automatically by using the TUNE function.

Features

- Illuminated graphic display with backlight and touch keypad
- Universal control system for single and double acting actuators
- Ultra-dynamic actuating system without internal pilot air consumption
- Integrated diagnostic functions for valve monitoring
- PROFIBUS DPV1, EtherNet/IP, PROFINET, Modbus TCP, Bürkert system bus (büS)
- Compact and robust design
- Adaptation according to IEC 534 - 6 or VDI/VDE 3845 for lift and swivel drives or as remote variant on Bürkert process valves

Customer benefits

- Quick and easy commissioning
- Intuitive and simple operation via a graphic display with backlight and touch keypad
- Guaranteed reliability and scheduled maintenance thanks to valve monitoring and diagnostics
- Long service life

Positioner SideCONTROL BASIC Remote	
Positioner Type 8791 ▸ with remote sensor Type 8798 ▸ Actuator size Ø 70/90/130 mm	
	The intelligent digital positioner and process controller Type 8791/8798 is designed for mounting on linear and rotary actuators with standardisation in accordance with IEC 534 - 6 or VDI/VDE 3845 for demanding control tasks. The variant with remote position sensor Type 8798 is used for controlling Bürkert process control valves. It is operated via a graphic display with backlight. The positioner and process controller can be initialised automatically using the TUNE functions. **Features** • Simple design • Universal control system for single and double acting actuators • Highly dynamic actuating system without internal pilot air consumption in the balanced state • Adaptation according to IEC 534 - 6 or VDI/VDE 3845 for lift and swivel drives or as remote variant on Bürkert process valves • AS-Interface, IO-Link, Bürkert system bus (büS) (only for positioner Type 8791 BASIC Remote) **Customer benefits** • Simple commissioning • Simple device for simple control tasks • Low energy consumption
Positioner IP20 Type 8791 ▸ with remote sensor Type 8798 ▸ Actuator size Ø 70/90/130 mm	

DTS 1000475061 EN Version: L Status: RL (released | freigegeben | valide) printed: 22.12.2025

8. Networking and combination with other Bürkert products

The **angle seat valve Type 2300** can be combined with the **process controller Type 8693** or the positioner controller **Type 8692/8694** to form the **Continuous ELEMENT valve system Type 8802-YG**.

Note:

- Use the **Product Enquiry Form** for the configuration of other valve systems (see **"9.3. Bürkert Product Enquiry Form" on page 23**).
- You order two components and receive a completely assembled and tested valve.

Angle seat valve		
Type 2300 threaded connection	**Type 2300 welded connection**	**Type 2300 clamp connection**
▼	▼	▼
Positioner	**Process controller**	**Positioner**
Type 8692 ▸ Digital electropneumatic positioner for the integrated mounting on process control valves	**Type 8693** ▸ Digital electropneumatic process controller for the integrated mounting on process control valves	**Type 8694** ▸ Digital electropneumatic positioner for the integrated mounting on process control valves
▼	▼	▼
Valve system Continuous ELEMENT		
Type 8802-YG-I ELEMENT continuous valve system	**Type 8802-YG-J** ELEMENT continuous valve system	**Type 8802-YG-L** ELEMENT continuous valve system

DTS 1000475061 EN Version: L Status: RL (released | freigegeben | valide) printed: 22.12.2025

The **angle seat valve Type 2300** can be combined with the **process controller Type 8793,** the **positioner Type 8792** or the **TopControl Basic Type 8696** to form the **Continuous ELEMENT valve system Type 8802-YG.**

Note:

- Use the **Product Enquiry Form** for the configuration of other valve systems (see **"9.3. Bürkert Product Enquiry Form" on page 23**).
- You order two components and receive a completely assembled and tested valve.

Angle seat valve		
Type 2300 threaded connection	**Type 2300 welded connection**	**Type 2300 clamp connection**
▼	▼	▼
Positioner	**Process controller**	**TopControl Basic**
Type 8792 ▶ Digital electropneumatic positioner SideCONTROL	**Type 8793** ▶ Digital electropneumatic process controller SideCONTROL	**Type 8696** ▶ Digital electropneumatic positioner for the integrated mounting on process control valves
▼	▼	▼
Valve system Continuous ELEMENT		
Type 8802-YG-P ELEMENT continuous valve system	**Type 8802-YG-Q** ELEMENT continuous valve system	**Type 8802-YG-N** ELEMENT continuous valve system

DTS 1000475061 EN Version: L Status: RL (released | freigegeben | valide) printed: 22.12.2025

9. Ordering information

9.1. Bürkert eShop

Bürkert eShop – Easy ordering and quick delivery

You want to find your desired Bürkert product or spare part quickly and order directly? Our online shop is available for you 24/7. Sign up and enjoy all the benefits.

Order online now

9.2. Bürkert product filter

Bürkert product filter – Get quickly to the right product

You want to select products comfortably based on your technical requirements?
Use the Bürkert product filter and find suitable articles for your application quickly and easily.

Try out our product filter

9.3. Bürkert Product Enquiry Form

Note:
Please see our Product Enquiry Form for a full explanation of our specification key.

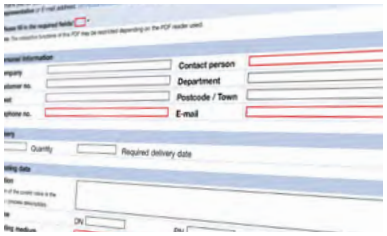

Bürkert Product Enquiry Form – Your enquiry quickly and compactly

Would you like to make a specific product enquiry based on your technical requirements? Use our Product Enquiry Form for this purpose. There you will find all the relevant information for your Bürkert contact. This will enable us to provide you with the best possible advice.

Fill out the form now

DTS 1000475061 EN Version: L Status: RL (released | freigegeben | valide) printed: 22.12.2025

9.4. Ordering chart threaded connection

Valves with flow direction below seat

Control function	Nominal diameter (port connection)	Port connection thread	Actuator size Ø	K_{VS} value water	Operating pressure max. +185 °C	Article no. Seat seal	Leakage class	Article no. Seat seal	Leakage class
	DN	[inch]	[mm]	[m³/h]	[bar(g)]	PTFE		Stainless steel	
G thread									
A (CF A) see control functions 1.)	15	G ½	50 (D)	5	16	213712	VI	213763	IV
		G ½	70 (M)	5	25	213713	VI	213764	IV
	20	G ¾	70 (M)	10	25	213715	VI	213766	IV
	25	G 1	70 (M)	16	12	213718	VI	213768	IV
		G 1	90 (N)	16	25	245405	VI	229276	IV
	32	G 1¼	70 (M)	23	6	213719	VI	213769	III
		G 1¼	90 (N)	23	16	245406	VI	225395	IV
	40	G 1½	90 (N)	34	12	213720	VI	213770	III
		G 1½	130 (P)	36	25	223307	VI	223310	IV
	50	G 2	90 (N)	49	7	203500	VI	206230	III
		G 2	130 (P)	53	25 (20 2.))	213697	VI	213708	IV
	65	G 2½	130 (P)	90	16 (15 2.))	239487	VI	239503	IV
B (CF B) see control functions 1.)	15	G ½	50 (D)	5	See diagram 3.)	213722	VI	223313	IV
		G ½	70 (M)	5		213721	VI	223314	IV
	20	G ¾	70 (M)	10		213724	VI	223316	IV
	25	G 1	70 (M)	16		213726	VI	223318	III
	32	G 1¼	70 (M)	23		213727	VI	223319	III
	40	G 1½	90 (N)	34		213728	VI	223320	IV
	50	G 2	90 (N)	49		203510	VI	223321	III
	65	G 2½	130 (P)	90		239495	VI	239511	IV
NPT thread									
A (CF A) see control functions 1.)	15	NPT ½	50 (D)	5	16	213729	VI	213771	IV
		NPT ½	70 (M)	5	25	213730	VI	213772	IV
	20	NPT ¾	70 (M)	10	25	213732	VI	213774	IV
	25	NPT 1	70 (M)	16	12	213734	VI	213776	IV
		NPT 1	90 (N)	16	25	465032	VI	464364	IV
	32	NPT 1¼	70 (M)	23	6	213736	VI	213777	III
		NPT 1¼	90 (N)	23	16	465033	VI	464365	IV
	40	NPT 1½	90 (N)	34	12	213737	VI	213778	III
		NPT 1½	130 (P)	36	25	223308	VI	223311	IV
	50	NPT 2	90 (N)	49	7	203537	VI	206239	III
		NPT 2	130 (P)	53	25 (20 2.))	213699	VI	213709	IV
	65	NPT 2½	130 (P)	90	16 (15 2.))	239488	VI	239504	IV
B (CF B) see control functions 1.)	15	NPT ½	50 (D)	5	See diagram 3.)	213738	VI	223322	IV
		NPT ½	70 (M)	5		213739	VI	223323	IV
	20	NPT ¾	70 (M)	10		213741	VI	223325	IV
	25	NPT 1	70 (M)	16		213743	VI	223327	III
	32	NPT 1¼	70 (M)	23		213744	VI	223328	III
	40	NPT 1½	90 (N)	34		213745	VI	223329	IV
	50	NPT 2	90 (N)	49		203546	VI	223330	III
	65	NPT 2½	130 (P)	90		239486	VI	239512	IV

1.) Further information can be found in chapter "2. Control functions" on page 4.
2.) According to pressure equipment directive 97/23/EC for compressible fluids of group 1 (dangerous gases and vapours) according to article 3, number 1.3, letter a, first indent)
3.) See diagrams in chapter "Pilot pressure diagrams with flow direction below seat (control function B)" on page 14.

DTS 1000475061 EN Version: L Status: RL (released | freigegeben | valide) printed: 22.12.2025

Control function	Nominal diameter (port connection)	Port connection thread	Actuator size Ø	K_{VS} value water	Operating pressure max. + 185 °C	Article no. Seat seal	Leakage class	Article no. Seat seal	Leakage class
	DN	[inch]	[mm]	[m³/h]	[bar(g)]	PTFE		Stainless steel	
RC thread									
A (CF A) see control functions [1.)]	15	RC ½	50 (D)	5	16	213746	VI	213779	IV
		RC ½	70 (M)	5	25	213747	VI	213780	IV
	20	RC ¾	70 (M)	10	25	213749	VI	213782	IV
	25	RC 1	70 (M)	16	12	213751	VI	213784	IV
		RC 1	90 (N)	16	25	245407	VI	245438	IV
	32	RC 1¼	70 (M)	23	6	213752	VI	213785	III
		RC 1¼	90 (N)	23	16	245408	VI	245439	IV
	40	RC 1½	90 (N)	34	12	213753	VI	213786	III
		RC 1½	130 (P)	36	25	223309	VI	223312	IV
	50	RC 2	90 (N)	49	7	203555	VI	206249	III
		RC 2	130 (P)	53	25 (20 [2.)])	213700	VI	213710	IV
	65	RC 2½	130 (P)	90	16 (15 [2.)])	239489	VI	239506	IV
B (CF B) see control functions [1.)]	15	RC ½	50 (D)	5	See diagram [3.)]	213755	VI	223331	IV
		RC ½	70 (M)	5		213756	VI	223332	IV
	20	RC ¾	70 (M)	10		213758	VI	223334	IV
	25	RC 1	70 (M)	16		213760	VI	223336	III
	32	RC 1¼	70 (M)	23		213761	VI	223337	III
	40	RC 1½	90 (N)	34		213762	VI	223338	IV
	50	RC 2	90 (N)	49		203564	VI	223339	III
	65	RC 2½	130 (P)	90		239497	VI	239513	IV

1.) Further information can be found in chapter "2. Control functions" on page 4.
2.) According to pressure equipment directive 97/23/EC for compressible fluids of group 1 (dangerous gases and vapours) according to article 3, number 1.3, letter a, first indent)
3.) See diagrams in chapter "Pilot pressure diagrams with flow direction below seat (control function B)" on page 14.

DTS 1000475061 EN Version: L Status: RL (released | freigegeben | valide) printed: 22.12.2025

9.5. Ordering chart welded connection

Valves with flow direction below seat

Control function	Nominal diameter (port connection)	Connec-tion Ø DS x WS	Actuator size Ø	K_{VS} value water	Operating pressure max. + 185 °C	Article no. Seat seal	Leakage class	Article no. Seat seal	Leakage class
	DN	[inch]	[mm]	[m³/h]	[bar(g)]	PTFE		Stainless steel	
DIN EN ISO 1127									
A (CF A) see control functions 1.)	15	21.3 × 1.6	50 (D)	5	16	203565	VI	206250	IV
		21.3 × 1.6	70 (M)	5	25	203566	VI	206252	IV
	20	26.9 × 1.6	70 (M)	10	25	203568	VI	206254	IV
	25	33.7 × 2	70 (M)	16	12	203570	VI	206256	III
		33.7 × 2	90 (N)	16	25	245395	VI	245403	IV
	32	42.4 × 2	70 (M)	23	6	203571	VI	206257	III
		42.4 × 2	90 (N)	23	16	204766	VI	245404	IV
	40	48.3 × 2	90 (N)	34	12	203572	VI	206258	III
		48.3 × 2	130 (P)	36	25	223299	VI	223306	IV
	50	60.3 × 2.0	90 (N)	49	7	274669	VI	274670	III
		60.3 × 2.0	130 (P)	53	25 (20 2.))	274672	VI	274673	IV
	65	76.1 × 2.3	130 (P)	90	16 (15 2.))	239490	VI	217770	IV
B (CF B) see control functions 1.)	15	21.3 × 1.6	50 (D)	5	See diagram 3.)	203574	VI	223340	IV
		21.3 × 1.6	70 (M)	5		203575	VI	223341	IV
	20	26.9 × 1.6	70 (M)	10		203577	VI	223343	IV
	25	33.7 × 2	70 (M)	16		203579	VI	223345	III
	32	42.4 × 2	70 (M)	23		203580	VI	223346	III
	40	48.3 × 2	90 (N)	34		203581	VI	223347	IV
	50	60.3 × 2.0	90 (N)	49		274674	VI	274675	III
	65	76.1 × 2.3	130 (P)	90		239498	VI	239515	IV
DIN 11850 R2									
A (CF A) see control functions 1.)	15	19 × 1.5	50 (D)	5	16	203583	VI	223349	IV
		19 × 1.5	70 (M)	5	25	203584	VI	223350	IV
	20	23 × 1.5	70 (M)	10	25	203586	VI	223352	IV
	25	29 × 1.5	70 (M)	16	12	203588	VI	223354	III
		29 × 1.5	90 (N)	16	25	245396	VI	245409	IV
	32	35 × 1.5	70 (M)	23	6	203589	VI	223355	III
		35 × 1.5	90 (N)	23	16	204767	VI	245410	IV
	40	41 × 1.5	90 (N)	34	12	203590	VI	223356	III
		41 × 1.5	130 (P)	36	25	223300	VI	223357	IV
	50	53 × 1.5	90 (N)	49	7	203591	VI	223358	III
		53 × 1.5	130 (P)	53	25 (20 2.))	213702	VI	223359	IV
	65	70 × 2	130 (P)	90	16 (15 2.))	239491	VI	239507	IV
B (CF B) see control functions 1.)	15	19 × 1.5	50 (D)	5	See diagram 3.)	203592	VI	223360	IV
		19 × 1.5	70 (M)	5		203593	VI	223361	IV
	20	23 × 1.5	70 (M)	10		203595	VI	223363	IV
	25	29 × 1.5	70 (M)	16		203597	VI	223365	III
	32	35 × 1.5	70 (M)	23		203598	VI	223366	III
	40	41 × 1.5	90 (N)	34		203599	VI	223367	IV
	50	53 × 1.5	90 (N)	49		203600	VI	223368	III
	65	70 × 2	130 (P)	90		239499	VI	239516	IV

1.) Further information can be found in chapter "2. Control functions" on page 4.
2.) According to pressure equipment directive 97/23/EC for compressible fluids of group 1 (dangerous gases and vapours) according to article 3, number 1.3, letter a, first indent)
3.) See diagrams in chapter "Pilot pressure diagrams with flow direction below seat (control function B)" on page 14.

DTS 1000475061 EN Version: L Status: RL (released | freigegeben | valide) printed: 22.12.2025

Control function	Nominal diameter (port connection)	Connection Ø DS x WS	Actuator size Ø	K_{VS} value water	Operating pressure max. +185 °C	Article no. Seat seal	Leakage class	Article no. Seat seal	Leakage class
	DN [inch]	[inch]	[mm]	[m³/h]	[bar(g)]	PTFE		Stainless steel	
ASME BPE									
A (CF A) see control functions 1.)	½	12.7 × 1.65	50 (D)	1.6	16	203601	VI	223369	IV
		12.7 × 1.65	70 (M)	1.6	25	203602	VI	223370	IV
	¾	19.05 × 1.65	70 (M)	10	25	203604	VI	223372	IV
	1	25.4 × 1.65	70 (M)	16	12	203606	VI	223374	III
		25.4 × 1.65	90 (N)	16	25	245397	VI	464366	IV
	1½	38.1 × 1.65	90 (N)	34	12	203607	VI	212906	III
		38.1 × 1.65	130 (P)	36	25	223303	VI	223376	IV
	2	50.8 × 1.65	90 (N)	49	7	203608	VI	223377	III
		50.8 × 1.65	130 (P)	53	25 (20 2.))	213703	VI	223378	IV
	2½	63.5 × 1.65	130 (P)	90	16 (15 2.))	239492	VI	239508	IV
B (CF B) see control functions 1.)	½	12.7 × 1.65	50 (D)	1.6	See diagram 3.)	203609	VI	223379	IV
		12.7 × 1.65	70 (M)	1.6		203610	VI	223380	IV
	¾	19.05 × 1.65	70 (M)	10		203612	VI	223382	IV
	1	25.4 × 1.65	70 (M)	16		203614	VI	223384	III
	1½	38.1 × 1.65	90 (N)	34		203615	VI	223385	IV
	2	50.8 × 1.65	90 (N)	49		203616	VI	223386	III
	2½	63.5 × 1.65	130 (P)	90		239500	VI	239517	IV

1.) Further information can be found in chapter "2. Control functions" on page 4.
2.) According to pressure equipment directive 97/23/EC for compressible fluids of group 1 (dangerous gases and vapours) according to article 3, number 1.3, letter a, first indent)
3.) See diagrams in chapter "Pilot pressure diagrams with flow direction below seat (control function B)" on page 14.

DTS 1000475061 EN Version: L Status: RL (released | freigegeben | valide) printed: 22.12.2025

9.6. Ordering chart clamp connection

Valves with flow direction below seat

Control function	Nominal diameter (port connection)	Connection Ø D1 C x SC, Ø D2 C	Actuator size Ø	K_{VS} value water	Operating pressure max. + 185 °C	Article no. Seat seal	Leakage class	Article no. Seat seal	Leakage class
	DN	[inch]	[mm]	[m³/h]	[bar(g)]	PTFE		Stainless steel	
ISO 2852									
A (CF A) see control functions 1.)	15	21.3 × 1.6. 50.5	50 (D)	5	16	o. r.	VI	o. r.	IV
		21.3 × 1.6. 50.5	70 (M)	5	25	20010520	VI	378088	IV
	20	26.9 × 1.6. 50.5	70 (M)	10	25	203652	VI	223426	IV
	25	33.7 × 2.0. 50.5	70 (M)	16	12	203654	VI	223428	III
		33.7 × 2.0. 50.5	90 (N)	16	25	245401	VI	245414	IV
	32	42.4 × 2.0. 50.5	70 (M)	23	6	203655	VI	223429	III
		42.4 × 2.0. 50.5	90 (N)	23	16	204768	VI	245415	IV
	40	48.3 × 2.0. 64.0	90 (N)	34	12	203656	VI	223430	III
		48.3 × 2.0. 64.0	130 (P)	36	25	223304	VI	223431	IV
	50	60.3 × 2.6. 77.5	90 (N)	49	7	203657	VI	223433	III
		60.3 × 2.6. 77.5	130 (P)	53	25 (20 2.))	213706	VI	223434	IV
B (CF B) see control functions 1.)	15	21.3 × 1.6. 50.5	50 (D)	5	See diagram 2.)	o. r.	VI	o. r.	IV
		21.3 × 1.6. 50.5	70 (M)	5		o. r.	VI	o. r.	IV
	20	26.9 × 1.6. 50.5	70 (M)	10		203661	VI	223438	IV
	25	33.7 × 2.0. 50.5	70 (M)	16		203663	VI	223440	III
	32	42.4 × 2.0. 50.5	70 (M)	23		203664	VI	223441	III
	40	48.3 × 2.0. 64.0	90 (N)	34		203665	VI	223442	IV
	50	60.3 × 2.6. 77.5	90 (N)	49		203666	VI	223443	III
ASME BPE									
A (CF A) see control functions 1.)	½	12.7 × 1.65. 25.0	50 (D)	1.6	16	203667	VI	223444	IV
		12.7 × 1.65. 25.0	70 (M)	1.6	25	203668	VI	223445	IV
	¾	19.05 × 1.65. 25.0	70 (M)	10	25	203670	VI	223447	IV
	1	25.4 × 1.65. 50.5	70 (M)	16	12	203672	VI	223449	III
		25.4 × 1.65. 50.5	90 (N)	16	25	245402	VI	245416	IV
	1½	38.1 × 1.65. 50.5	90 (N)	34	12	203673	VI	223450	III
		38.1 × 1.65. 50.5	130 (P)	36	25	223305	VI	223451	IV
	2	50.8 × 1.65. 64.0	90 (N)	49	7	203674	VI	223452	III
		50.8 × 1.65. 64.0	130 (P)	53	25 (20 2.))	213707	VI	223453	IV
B (CF B) see control functions 1.)	½	12.7 × 1.65. 25.0	50 (D)	1.6	See diagram 2.)	203675	VI	223454	III
		12.7 × 1.65. 25.0	70 (M)	1.6		203677	VI	223455	IV
	¾	19.05 × 1.65. 25.0	70 (M)	10		203679	VI	223457	IV
	1	25.4 × 1.65. 50.5	70 (M)	16		203681	VI	223459	III
	1½	38.1 × 1.65. 50.5	90 (N)	34		203682	VI	223460	IV
	2	50.8 × 1.65. 64.0	90 (N)	49		203683	VI	223461	III

o. r. = on request

1.) Further information can be found in chapter "2. Control functions" on page 4.

2.) See diagrams in chapter "Pilot pressure diagrams with flow direction below seat (control function B)" on page 14.

Further variants on request

Process connection Clampaccording to DIN 32676, BS4825	**Circuit function** B (normally open) and I (double-acting)

DTS 1000475061 EN Version: L Status: RL (released | freigegeben | valide) printed: 22.12.2025